5D.10 Seawater Desalination (N-10)

5D.10.1 Seawater Desalination Background

Seawater desalination is a process whereby seawater is treated to reduce total dissolved solids, salts, and minerals to make suitable for human consumption and/or high quality industrial/manufacturing purposes. Seawater near Corpus Christi Bay, where plants are being considered, is estimated to have total dissolved solids (TDS) content of between 30,000 and 50,000 parts per million.

Commercially available processes that are commonly used to desalt seawater to produce potable water are:

- Distillation (thermal) Processes; and
- Membrane (non-thermal) Processes.

Figure 5D.10.1 shows a process diagram for a typical seawater desalination treatment plant, the percent of water flowing through each component of the system, and the concentration of the TDS. This diagram is intended to serve as an example, recognizing that details and recovery percentages for specific seawater desalination plants may vary.

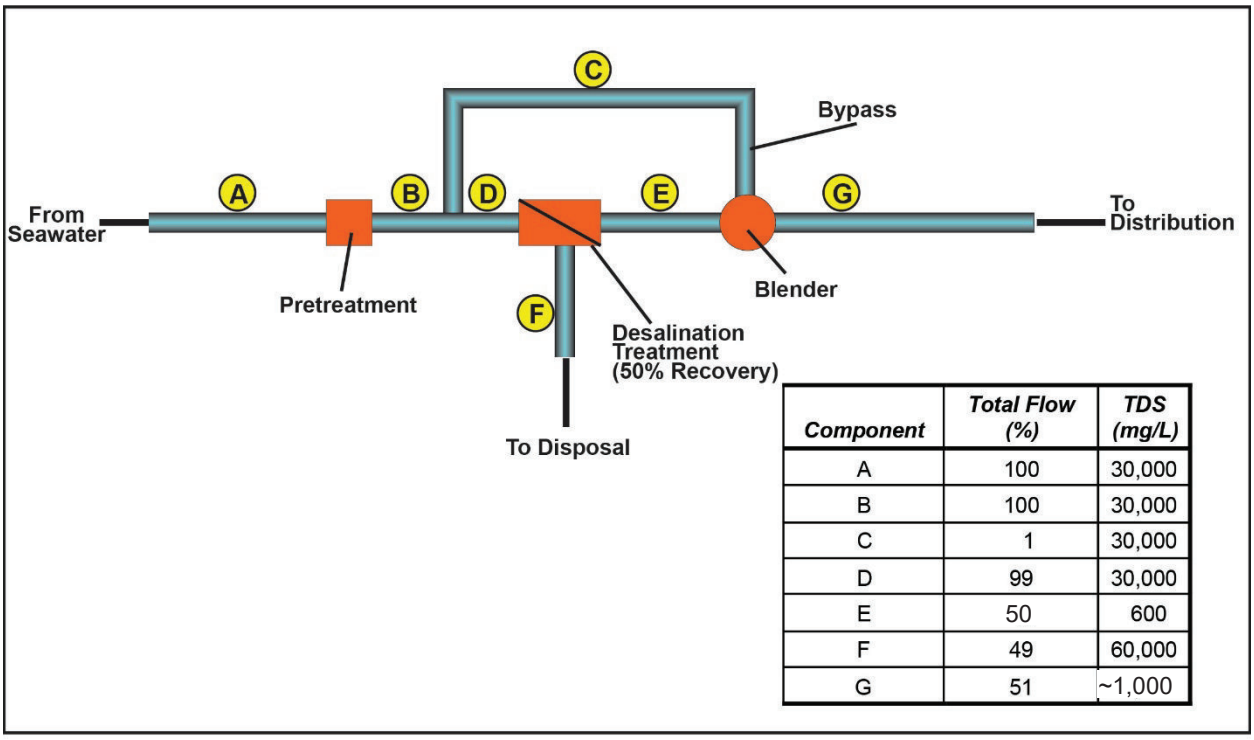

Component	Total Flow (%)	TDS (mg/L)
A	100	30,000
B	100	30,000
C	1	30,000
D	99	30,000
E	50	600
F	49	60,000
G	51	~1,000

Figure 5D.10.1.
Flow Diagram for a Typical Seawater Desalination Water Treatment Plant

The following section describes distillation and membrane processes and discusses a number of issues that should be considered before selecting a process for desalination of seawater. Coastal seawater desalination projects are either in operation or under construction in Florida and California, but there are no seawater desalination plants operating in Texas.[1]

Distillation (Thermal) Processes

Distillation processes produce purified water by vaporizing a portion of the saline feedstock to form steam. Since the salts dissolved in the feedstock are nonvolatile, they remain unvaporized and the steam formed is captured as a pure condensate. Distillation processes are normally very energy-intensive, expensive, and are generally used for large-scale desalination of seawater. Heat is usually supplied by steam produced by boilers or from a turbine power cycle used for electric power generation. Distillation plants are commonly dual-purpose facilities that produce purified water and electricity. According to a recent study by the City of Corpus Christi, geothermal energy is better suited to thermal desalination rather than to reverse osmosis membrane processes.[2]

In general, for a specific plant capacity, the equipment in distillation plants tends to be much larger than membrane desalination equipment. However, distillation plants do not have the stringent feedwater quality requirements of membrane plants. Due to the relatively high temperatures required to evaporate water, distillation plants have high energy requirements, making energy a large factor in their overall water cost. Their high operating temperatures can result in scaling (precipitation of minerals from the feedwater), which reduces the efficiency of the evaporator processes, because once an evaporator system is constructed, the size of the exchange area and the operating profile are fixed, leaving energy transfer as a function of only the heat transfer coefficient. Therefore, any scale that forms on heat exchanger surfaces reduces heat transfer coefficients. Under normal circumstances, scale can be controlled by chemical inhibitors, which inhibit but do not eliminate scale, and by operating at temperatures of less than 200 degrees Fahrenheit.

Distillation product water recoveries normally range from 15 to 45 percent, depending on the process. The product water from these processes is nearly mineral-free, with very low total dissolved solids (TDS) (less than 25 mg/L). However, this product water is extremely aggressive and is too corrosive to meet the Safe Drinking Water Act corrosivity standards without post-treatment. Product water can be stabilized by chemical treatment or by blending with other potable water.

The three main distillation processes in use today are Multistage Flash Evaporation (MSF), Multiple Effect Distillation (MED), and Vapor Compression (VC). All three of these processes utilize an evaporator vessel that vaporizes and condenses the feedstock. The three processes differ in the design of the heat exchangers in the vessels and in the method of heat introduction

---

[1] City of Corpus Christi website, "Corpus Christi Desalination Demonstration Project", June 2014. http://www.cctexas.com/Assets/Departments/Water/Files/DesalFactSheet.pdf

[2] City of Corpus Christi, Variable Salinity Desalination Demonstration Project "Technical Memorandum No. 1-Desalination Technology Research Project No. E13063", September 2014.

into the process. Since there are no distillation processes in Texas that can be shown as comparable installations, distillation will not be considered here. However, there are membrane desalination operations in Texas, so the following discussion and analyses are based upon information from the use of membrane technology for desalination.

Membrane (Non-Thermal) Processes

The two types of membrane processes use either pressure — as in reverse osmosis (RO) — or electrical charge — as in electrodialysis reversal (EDR) — to reduce the mineral content of water. Both processes use semi-permeable membranes that allow selected ions to pass-through while other ions are blocked. EDR uses direct electrical current applied across a vessel to attract the dissolved salt ions to their opposite electrical charges. EDR can desalinate brackish water with TDS up to several thousand milligrams per liter, but energy requirements make it economically uncompetitive for seawater, which contains approximately 35,000 mg/L TDS. As a result, only RO is used for seawater desalination.

RO utilizes a semi-permeable membrane that limits the passage of salts from the saltwater side to the freshwater side of the membrane. Electric motor-driven pumps or steam turbines (in dual-purpose installations) provide the 800 to 1,200 pounds per square inch (psi) pressure to overcome the osmotic pressure and drive the freshwater through the membrane, leaving a waste stream of brine/concentrate. The basic components of an RO plant include pre-treatment, high-pressure pumps, membrane assemblies, and post-treatment. Pretreatment is essential because feedwater must pass through very narrow membrane passages during the process and suspended materials, biological growth, and some minerals can foul the membrane. As a result, virtually all suspended solids must be removed and the feedwater must be pre-treated so precipitation of minerals or growth of microorganisms does not occur on the membranes. This is normally accomplished by using various levels of filtration and the addition of various chemical additives and inhibitors. Post-treatment of product water is usually required prior to distribution to reduce its corrosivity and to improve its aesthetic qualities. Specific treatment is dependent on product water composition.

A "single-pass/stage" seawater RO plant will produce water with a TDS of 300 to 500 mg/L, most of which is sodium and chloride. The product water will be corrosive, but this may be acceptable, if a source of blending water is available. If not, and if post-treatment is required, the various post-treatment additives may cause the product water to exceed the desired TDS levels. In such cases, or when better water quality is desired, a "two-pass/stage" RO system is used to produce water typically in the 200 mg/L TDS range. In a two-pass RO system, the concentrate water from the first RO pass/stage is further desalted in a second RO pass/stage, and the product water from the second pass is blended with product water from the first pass.

Recovery rates up to 45 percent are common for a two-pass/stage seawater RO facility. RO plants, which comprise about 47 percent of the world's desalting capacity, range from a few gallons per day to 35 mgd. The largest RO seawater plant in the United States is the 25 mgd plant in Tampa Bay, Florida. The current domestic and worldwide trend seems to be for the adoption of RO when a single purpose seawater desalting plant is to be constructed. RO

membranes have been improved significantly over the past two decades (i.e. the membranes have been improved with respect to efficiency, longer life, and lower prices). Municipal use desalination plants in Texas that use lake water, river, or groundwater are shown in Table 5D.10.1. The plant capacities range from 0.1 mgd (Homestead MUD-El Paso) to 10 mgd (Lake Granbury).

Table 5D.10.1.
Municipal Use Desalt Plants in Texas (>25,000 gpd as of April 2015)

Location	County	Source	Raw Water TDS (mg/L), estimate	Target TDS for Finished Water (mg/L)	Total Capacity (mgd)	Desalt Capacity (mgd)	Membrane Type[1]	Membrane Recovery (%)
Big Bend Motor Inn	Brewster	Groundwater	1694	300	0.057	0.057	RO	75
Abilene, City of	Taylor	Surface Water	1,500	500	7.95	3	RO	65-78
Bardwell, City of	Ellis	Groundwater	No Data	400	0.252	0.036	RO	60
Bayside, City of	Refugio	Groundwater	2500	350	0.045	-	RO	No Data
Beckville, City of	Panola	Groundwater	1200	100	0.216	0.216	RO	75
Brady, City of	McCulloch	Surface Water	1200-1600	No Data	3	1.5	RO	75
Clarksville City, City of	Gregg	Groundwater	No Data	No Data	0.288	0.288	RO	75
Evant, City of	Coryell	Groundwater	1100	800	0.1	0.08	RO	80
Ft. Stockton, City of	Pecos	Groundwater	1500	1000	6.5	6.5	RO	80
Granbury, City of (IDLE)	Hood	Surface Water	No Data	No Data	0.462	0.35	RO	No Data
Hubbard, City of	Hill	Groundwater	2793	No Data	0.648	0.432	RO	62
Kenedy, City of	Karnes	Groundwater	1500	No Data	2.86	0.72	RO	67
Laredo, City of	Webb	Groundwater	2112	250	0.1	0.1008	RO	76
Los Ybanez, City of (IDLE)	Dawson	Groundwater	No Data	No Data	-	-	RO	No Data
Robinson, City of	McLennan	Surface Water	750	50	2.3	1.6	RO	75
Seadrift, City of	Calhoun	Groundwater	2200	400	0.61	0.524	RO	70
Seymour, City of	Baylor	Groundwater	800	400	3	3	RO	81
Sherman, City of	Grayson	Surface Water	No Data	440	11	7.5	EDR	85
Tatum, City of	Rusk	Surface Water	1200	320	0.324	0.288	RO	75
Cypress WTP	Wichita	Surface Water	3500	200	10	-	RO	71
Dell City	Hudspeth	Groundwater	1466	435	0.1	0.1	EDR	75
DS Waters of America, LP	Waller	Groundwater	470	36	0.09	-	RO	75
Esperanza Fresh Water Supply	Hudspeth	Groundwater	No Data	No Data	0.023	-	RO	No Data
Fort Hancock RO Plant 1	Hudspeth	Groundwater	No Data	No Data	0.43	0.43	RO	78
Holiday Beach WSC	Aransas	Groundwater	2000	450	0.15	-	RO	70
Horizon Regional MUD RO Plant	El Paso	Groundwater	No Data	80	6	3.3	RO	75
K.B. Hutchison Desalination Plant	El Paso	Groundwater	2000-3000	450-500	27.5	15	RO	82.5
Lake Granbury	Hood	Surface Water	No Data	35	12.5	7.5	RO	85

Location	County	Source	Raw Water TDS (mg/L), estimate	Target TDS for Finished Water (mg/L)	Total Capacity (mgd)	Desalt Capacity (mgd)	Membrane Type[1]	Membrane Recovery (%)
Longhorn Ranch Motel	Brewster	Groundwater	3500	No Data	0.023	0.023	RO	No Data
Midland Country Club	Midland	Groundwater	3840	200	0.023	0.11	RO	80
North Alamo WSC (Doolittle)	Hidalgo	Groundwater	2500	500	3.5	3	RO	No Data
North Alamo WSC (Lasara)	Willacy	Groundwater	No Data	500	1.2	1	RO	No Data
North Alamo WSC (Owassa)	Hidalgo	Groundwater	2000	500	2	1.5	RO	No Data
North Cameron/ Hidalgo WA	Cameron	Groundwater	3500	200	2.5	2	RO	75
Oak Trail Shores	Hood	Surface Water	No Data	No Data	1.584	-	RO	No Data
Possum Kingdom WSC	Palo Pinto	Surface Water	2400	50-100	1	-	RO	75
River Oaks Ranch	Hays	Groundwater	1500	300	0.1152	0.1152	RO	70
Southmost Regional Water Authority	Cameron	Groundwater	3500	500	7.5	6	RO	75
Sportsmans World MUD	Palo Pinto	Surface Water	No Data	300	0.083	0.083	RO	50
Study Butte Terlingua Water System	Brewster	Groundwater	1425	200	0.14	0.144	RO	75
The Cliffs	Palo Pinto	Surface Water	No Data	400	0.381	0.381	RO	80
Valley MUD #2	Cameron	Groundwater	3500	400	1	0.5	RO	75
Veolia WTP (IDLE)	Jefferson	Surface Water	No Data	No Data	0.245	0.066	RO	80
Victoria Road RO Plant	Hidalgo	Groundwater	4000	150	2.25	2	RO	75
Water Runner Inc.	Midland	Groundwater	790	No Data	0.028	2.16	RO	95
Windermere Water System (IDLE)	Travis	Groundwater	900	No Data	2.88	1	RO	No Data

Source: TWDB Desalination Plant Database, 2010

[1] RO = Reverse Osmosis EDR = Electrodialysis Reversal

5D.10.1.1 Examples of Relevant Existing Desalt Projects

Seadrift, TX: In 1996, Seadrift (retail population 1,890) was dependent on the Gulf Coast Aquifer for its water supply. TDS and chlorides had reached unacceptable levels of 1,592 mg/L and 844 mg/L, respectively. These values exceeded the primary drinking water standard for TDS (1,000 mg/L) and the secondary drinking water standard for chlorides (300 mg/L). Since the community was not located near an adequate quantity of freshwater or a wholesaler of drinking water, the decision was made to install RO to treat this slightly brackish groundwater. The city installed pressure filters, two RO units, antiscalant chemical feed equipment, and a chlorinator. The capital cost for the system was $1.2 million and the annual operation and maintenance (O&M) cost is $56,000, resulting in a total debt service plus O&M cost of about $0.88 per 1,000 gallons treated by RO. The capital cost included the cost of facilities in addition to the RO units

and their appurtenant equipment. Product water from the RO units is blended with groundwater to meet an acceptable quality level. About 60 percent of the total is from the desalt units.

Tampa, FL: The water utility, Tampa Bay Water, selected a 30-year design, build, operate, and own (DBOO) proposal to construct a nominal 25 mgd seawater desalt plant. The plant will use RO as the desalt process. The proposal included total capitalization and operations costs for producing high quality drinking water (chlorides less than 100 mg/L). The total cost to Tampa Bay Water in the original proposal was to be $2.08 per 1,000 gallons on a 30-year average, with first year cost being $1.71 per 1,000 gallons. However, subsequent issues with the original design including significant problems in obtaining adequate pretreatment have increased the projected total cost to Tampa Bay Water by $0.72 per 1,000 gallons for a total projected cost of $2.80 per 1,000 gallons on a 30-year average.[3] The results of Tampa Bay's competition has attracted international interest in the current cost profile of desalting seawater for drinking water supply, since these costs are only about one-half the levels experienced in previous desalination projects.

Tampa Bay Water selected the winning proposal from four DBOO proposals submitted, which ranged from $2.08 to $2.53 per 1,000 gallons. The factors listed below may be all or partially responsible for these seemingly low costs:

- Salinity at the Tampa Bay sites ranges from 25,000 to 30,000 mg/L, lower than the more common 35,000 mg/L for seawater. RO cost is sensitive to salinity.
- The power cost, which is interruptible, is below $0.04 per kilowatt-hour (kWh).
- Construction cost savings through using existing power plant canals for intake and concentrate discharge.
- Economy of scale at 25 mgd.
- Amortizing over 30 years.
- Use of tax-exempt bonds for financing.

The Tampa bids contrast with another current large-scale desalination project in which distillation is proposed. The current desalt project of the Singapore Public Utility Board, which proposes a 36 mgd multi-stage flash distillation plant, will cost an estimated $5.76 per 1,000 gallons for the first year operation.[4]

Carlsbad Desalination Facility: This 54 MGD desalination plant is located in California and designed by Poseidon with 10 miles of 54 inch pipeline serving San Diego County. It is the largest desalination plan in the Americas. The main technology used for desalination is reverse osmosis. The main delivery method is Design-Build-Finance-Own-Operate-Maintain and Transfer. The total capital cost for the project was around $922 milllion, which closed in 2012. The project became operational in December 2015 and was delivered on time and on budget. The total water produced to data is greater than 51 billion gallons. The estimated costs is around $7.82 per thousand gallons, which includes the cost to convey water through the 10 mile pipeline up to 1,000 ft of elevation change.

---

[3] Associated Press, "Tampa Bay Water to Hire Group to Fix Desalination Plant," September 21, 2004.
[4] Desalination & Water Reuse Quarterly, vol. 7/4, Feb/Mar 1998.

5D.10.2 Environmental Issues

In the Coastal Bend Region, there are five proposed desalination plant options being considered by different entities, including the City of Corpus Christi, the Port of Corpus Christi Authority, and Poseidon, as shown in Figure 5D.10.2. Site specific environmental issues are discussed in the following sections (Sections 5D.10 through 5D.12). This section discusses more general environmental issues associated with seawater desalination plants in the Coastal Bend area.

Figure 5D.10.2.
Locations for Proposed Seawater Desalination Plants in Region N

Estuaries and bays serve as critical habitat and spawning grounds for many marine species and migratory birds. Estuaries are marine environments maintained in a brackish state by the inflow of freshwater from rivers and streams. The high productivity characteristic of estuaries arises from the abundance of terrigenous nutrient input, shallow water, and the ability of a few marine species to exploit environments continually stressed by low, variable salinities, temperature extremes, and, on occasion, low dissolved oxygen concentrations. The potential environmental effects resulting from the construction of a desalination plant in the vicinity of Nueces Bay and/or Corpus Christi Bay will be sensitive to the siting of the plant and its appurtenances. Environmental analyses including impingement and entrainment will need to be considered as part of the intake evaluation.

The Texas Parks and Wildlife Department (TPWD) and the General Land Office (GLO) conducted a joint agency study[5], required by HB 2031, on marine seawater desalination plants. The study included general recommendations for diversion intake systems to reduce environmental impacts to marine organisms. While the projects proposed in the following sections are located bayside of the coastal barrier islands and are considered seawater desalination plants, some of the recommendations from the study may be applicable. The recommendations in the study for intake structures included:

- Keeping the flow-through velocity of seawater at the intake structure below 0.5 feet per second;
- Design intake structures to adjust or adaptively manage with varying flows and water quality;
- Design intake structures and reduce velocity so marine organisms can escape the intake; and
- Use exclusion devices, such as screens or booms, to exclude organisms from the intake.
- If possible and feasible, the study suggested drawing water down through a sandy bottom to below ground piping which would prevent impingement of marine organisms and entrainment of other organisms on the intake screen.

Concentrated brine effluent is produced during the desalination process. Releasing brine concentrate could potentially affect organisms that are dependent upon a specific range of temperature and salinity. Changes to the ratio and type of salt discharges can cause osmotic imbalances and toxicity. The joint TPWD/GLO study on marine seawater desalination also summarized recommendations on siting discharge locations, from their study and published literature. Site specific studies on the receiving waters and brine discharges should be conducted during project planning and include salinity, types of salts, circulation at the discharge site, other contaminants from the process, maintenance, or pipes that may be discharged to the receiving water. These studies should be conducted to find ways to minimize any potential toxicity, impacts to receiving water chemistry and biota.[6] Salinity can affect the density of seawater with higher salinity correlating to denser water potentially affecting water movement in the area. The City of Corpus Christi and Port of Corpus Christi Authority (PCCA) have suggested the use of diffusers at the discharge point, or another mechanism, to mix effluent with the seawater to reduce these types of impacts[6]. The Gulf of Mexico coastal seawater typically has a concentration of approximately 35 parts sea salt per thousand parts water by weight, where freshwater is near zero. Salinity variations in estuary and bay areas are typically in response to river inflow, evaporation, and mixing by wind and ocean tides.[7]

---

[5] Texas Parks and Wildlife Department and Texas General Land Office, 2018. Marine Seawater Desalination Diversion and Discharge Zones Study. Accessed online https://tpwd.texas.gov/publications/pwdpubs/media/hb2031dz.pdf?d=462414.3799 December 26, 2019.
[6] City of Corpus Christi Seawater Desalination Project (https://www.cctexas.com/desal) Accessed December 27, 2019.
[7] Amec Foster Wheeler, 2017. Process Design Basis and Narrative Port of Corpus Christi Industrial Seawater Desalination Harbor Island. December 2017.

The proposed projects are located within the Gulf Coast Prairies and Marshes physiographic region of Texas and within the Tamaulipan biotic province.[8] According to general vegetation data for the state of Texas, several vegetation types occur within the vicinity of the proposed projects, including urban, crops, live oak woods/parks, and marsh barrier island.[9] Vegetation impacts would include clearing areas for the desalination plants and for the installation of pipelines.

According to Information for Planning and Consultation (IPaC), provided by the U.S. Fish & Wildlife Service (USFWS) on December 18, 2019, 16 federally-listed threatened or endangered species have the possibility of being in the project area (see Table 5D.10.2). Critical habitat for the threatened Piping Plover (Charadrius melodus) is located on San Jose Island and Mustang Island, within the two miles of Harbor Island and the proposed Port of Corpus Christi Authority (Port) Harbor Island desalination site.[10]

Table 5D.10.2 lists state listed endangered or threatened species, and federally listed endangered or threatened species along with species of concern that may occur in Region N, including Nueces and San Patricio counties. This information comes from the county lists of rare species published online by the TPWD. Inclusion in this table does not mean that a species will occur within the project area, but only acknowledges the potential for its occurrence in the project area county. Because the project will use seawater, no impacts to existing stream flows or stream habitats would be anticipated. Positive impacts to river and stream segments may occur as utilizing treated seawater may reduce or eliminate the water needs from freshwater surface sources. Potential impacts to listed species within the project area could occur due to disturbance associated with intake and discharge structures during operation of the facility. However, proper siting and studies conducted prior to implementation will minimize these impacts.

Impacts to existing habitat resulting from the construction of the desalination plants and their associated pipelines, pump stations and water treatment facilities would be expected. Destruction of potential habitat can be avoided by utilizing previously disturbed areas. Site specific habitat surveys should be conducted prior to project construction to determine whether populations of or potential habitats used by listed species occur in the area to be affected. Coordination with TPWD and USFWS regarding threatened and endangered species with potential to occur in the project area should be initiated early in project planning.

[8] Blair, W.F., "The Biotic Provinces of Texas, "Tex. J. Sci. 2:93-117, 1950.
[9] McMahan, C.A., R.G. Frye, and K.L. Brown, 1984. The Vegetation Types of Texas. Accessed online https://tpwd.texas.gov/publications/pwdpubs/pwd_bn_w7000_0120/ March 22, 2019.
[10] USFWS, 2019. Information for Planning and Consultation (IPaC) resource list. December 18, 2019.

Table 5D.10.2. Federally-Listed Threatened or Endangered Species in the Vicinity of Proposed Desalination Projects in the Coastal Bend Region

Common Name	Scientific Name	Federal Status	Habitat Requirements
Gulf Coast jaguarundi	*Herpailurus (=Felis) yagouaroundi cacomitli*	LE	Dense thorny shrublands.
Ocelot	*Leopardus (=Felis) pardalis*	LE	Restricted to mesquite-thorn scrub and live-oak mottes; avoids open areas.
West Indian manatee	*Trichechus manatus*	LT	Marine, brackish, and freshwater systems in coastal and riverine areas.
Attwater's Greater Prairie-chicken	*Tympanuchus cupido attwateri*	LE	Coastal prairie that include grasses such as little bluestem, big bluestem, Indiangrass, and switchgrass.
Least Tern	*Sterna antillarum*	LE	Bare or sparsely vegetated sand, shell and gravel beaches, sandbars, islands, and salt flats.
Northern Aplomado Falcon	*Falco femoralis septentrionalis*	LE	Open country, especially savanna and open woodland, and sometimes in very barren areas.
Piping Plover	*Charadrius melodus*	LT	Beaches, sandflats, and dunes along Gulf Coast beaches and adjacent offshore idlands. Also spoil islands in the Intracoastal Waterway.
Red Knot	*Calidris canutus rufa*	LT	Primarily seacoasts on tidal flats and beaches, herbaceous wetland, and tidal flat/shore.
Whooping Crane	*Grus americana*	LE	Small ponds, marshes and flooded grain fields for both roosting and foraging.
Green sea turtle	*Chelonia mydas*	LT	Gulf and bay system; shallow water seagrass beds, open water between feeding and nesting areas, barrier island beaches.
Hawksbill sea turtle	*Eretmochelys imbricata*	LE	Gulf and bay system, warm shallow waters especially in rocky marine environments such as coral reefs and jetties. Juveniles found in floating mats of sea plants.
Kemp's Ridley sea turtle	*Lepidochelys kempii*	LE	Gulf and bay system, adults stay within the shallow waters of the Gulf of Mexico.
Leatherback sea turtle	*Dermochelys coriacea*	LE	Gulf and bay systems, and widest ranging open water reptile.
Loggerhead sea turtle	*Caretta caretta*	LT	Gulf and bay system primarily for juveniles, adults are most pelagic of sea turtles.
Slender rush-pea	*Hoffmannseggia tenella*	LE	Coastal prairie grasslands on level uplands and on gentle slopes along drainages.
South Texas ambrosia	*Ambrosia cheiranthifolia*	LE	Grasslands and mesquite-dominated shrublands on various soils. Mostly over the Beaumont Formation on the Coastal Plain.

Source: TPWD, 2019. Annotated County Lists of Rare Species (Nueces and San Patricio Counties). Updated July 17, 2019.

LE Federally listed endangered LT Federally listed threatened

Energy is the largest operational cost of a desalination facility, and energy use is directly proportional to salinity of the source water. Potential indirect environmental effects include air and greenhouse gas emissions associated with energy usage. These effects could be minimized by incorporating the use of renewable energy sources.

Cultural resource surveys of the plant sites and pipeline routes will need to be performed consistent with requirements of the Texas Antiquities Commission. Because of the relatively small areas involved, construction and maintenance of surface facilities are not expected to result in substantial environmental impacts. Where environmental resources (e.g., endangered species habitat and cultural resource sites) could be impacted by infrastructure, changes in facility siting and pipeline alignment would generally be sufficient to avoid or minimize adverse effects.

House Bill (HB) 2031, passed by the 84th Legislature, requires consultation with TWDB and the GLO regarding siting of marine seawater desalination intakes and discharges to minimize ecological impacts. This legislation created new Texas Water Code (TWC) Chapter 18 addressing marine seawater desalination projects. TWC §18.003 establishes the requirements for obtaining a permit to divert the state's seawater and to discharge brine effluent from desalination projects into the Gulf of Mexico. This legislation applies to desalination plants sited outside the Texas coastal barrier islands.

5D.10.3 Implementation Issues

Permitting of this seawater desalination facilities will require extensive coordination with applicable regulatory entities, including TCEQ, GLO, and others listed above. Permitting and construction of the intake and concentrate pipeline will be major project components.

The installation and operation of a seawater desalination water treatment plant may have to address the following issues.

- Disposal of concentrated brine from desalination water treatment plant;
- Permitting and constructing concentrate pipeline through seagrass beds and barrier island;
- Impact on the bays from removing water for consumptive use and altering existing power plant water rights permits;
- Confirming that blending desalted seawater with other water sources in the municipal demand distribution system can be successfully accomplished;
- High power requirements for desalination process dependent on large, reliable power source;
- Skilled operators of desalination water treatment plants;
- Permitting of a pipeline across rivers, highways, and private rural and urban property; and
- Possibility of using a design, build, operate contract for a desalination water treatment plant.

5D.10.4 City of Corpus Christi Seawater Desalination- Inner Harbor and La Quinta Channel Projects

5D.10.4.1 Description of Strategy

Desalting seawater from the Gulf of Mexico is a potential source of freshwater supplies for municipal and industrial uses. In August 2004, the City of Corpus Christi (City) conducted a feasibility study[11] funded by the TWDB of a large-scale seawater desalination facility in the Region N area. For the 2006 and 2011 Coastal Bend Regional Water Plans, a large-scale 25 to 100 mgd seawater desalination facility co-sited with the Barney M. Davis Power Station in Corpus Christi near Laguna Madre, Oso Bay, and Corpus Christi Bay was considered. Favorable factors for the Barney Davis power station location include: use of cooling plant effluent for diluting concentrate, ability to use the existing seawater intake infrastructure at the power plant, and close proximity to the water distribution system. The desalination concentrate was considered to be piped out to the open Gulf of Mexico to be discharged in waters over 30 feet deep. The 2011 Coastal Bend Plan estimated the cost of a 25 mgd seawater desalination facility at Barney M. Davis Power Station with 5-mile pipeline delivery to proposed distribution center on the south side of town at $1,696 per ac-ft (or $5.21 per 1,000 gallons) based on September 2008 dollars. Blending with brackish groundwater, previously evaluated in the 2006 Plan, was eliminated from further consideration based on the lack of availability of groundwater at suitable quality (summarized in Chapter 11). The seawater desalination facility co-sited with Barney M. Davis Power Station was included as an alternate strategy in the 2011 Coastal Bend Regional Water Plan at the 25 mgd size, which was subsequently updated through amendment in August 2014 to be listed as a recommended strategy in the 2011 Coastal Bend Plan to meet needs beginning in 2020.

The City, as a wholesale water provider, continues to evaluate seawater desalination options, including variable desalination programs and combinations with brackish groundwater resources to address future industrial development and anticipated population growth associated with new industry and Eagle Ford Shale production. In April 2014, the Corpus Christi City Council voted to accept a federal, U.S. Bureau of Reclamation grant and transfer funds from the City's Raw Water Supply Development Fund for a City of Corpus Christi Desalination Program Pilot Study. In July 2014, Corpus Christi City Council considered and subsequently adopted a resolution to the 84th Texas Legislature to appropriate funding for FY 16-17 biennium and partnering with local sponsors to implement desalination projects.

The City conducted a 30-month, $3 million demonstration program with support from the U.S. Bureau of Reclamation to design, construct, and operate a demonstration desalination plant for industrial and drinking water purposes. The objectives of the program are to evaluate the feasibility of seawater desalination and develop cost estimates, to test emerging technologies, and to identify and assess site options and requirements for a full-scale facility.[12] With the

[11] City of Corpus Christi, Draft Report "Large Scale Demonstration Desalination Feasibility Study," August 2004.
[12] City of Corpus Christi website, "Corpus Christi Desalination Demonstration Project", June 2014. http://www.cctexas.com/Assets/Departments/Water/Files/DesalFactSheet.pdf

results of the study, the City will consider moving forward with a full-scale desalination project. During preliminary studies, the Barney M. Davis Power Station option was removed from further consideration due to a lack of interest by the power station to participate, as well as location not being favorable with respect to anticipated industrial and municipal growth areas.[13] As of November 2019, two potential sites are being considered by the City of Corpus Christi to provide additional supplies of 10 mgd for Nueces County industries and municipal customers and 20 mgd for San Patricio County: Inner Harbor and La Quinta Channel. These locations are shown in Figure 5D.10.3.

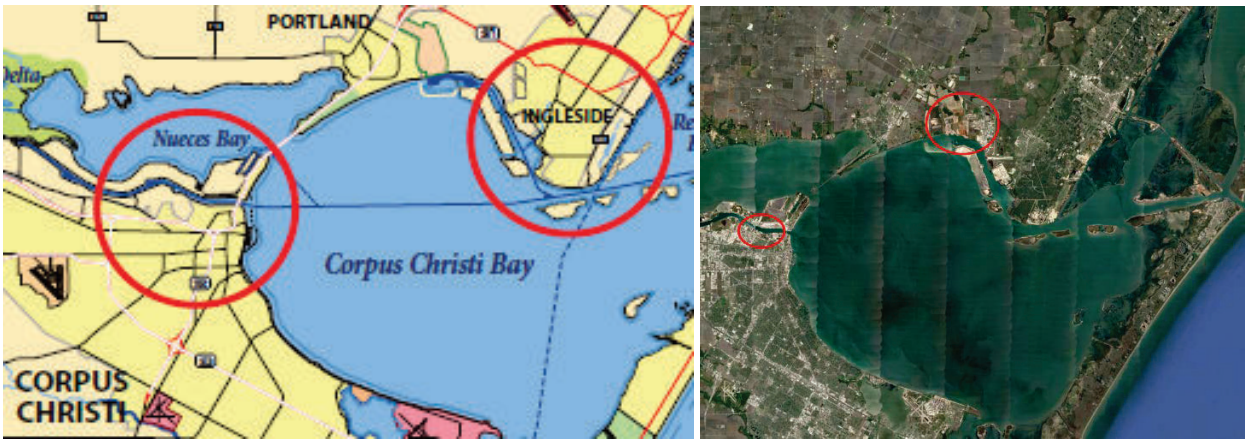

Source: Corpus Christi Desalination Demonstration Project Fact Sheet, June 2014 (http://www.cctexas.com/Assets/Departments/Water/Files/DesalFactSheet.pdf) and City of Corpus Christi, email October 2019

Figure 5D.10.3.
Proposed Location for Seawater Desalination Program

The Inner Harbor Desalination site in Nueces County could scale up from 10 to 30 MGD and La Quinta Channel Desalination site in San Patricio County could scale up from 20 to 40 MGD. The plants will likely expand to ultimate capacity in 30 years or more (2070+), but flexibility will be left for significant demand growth in the region. The treatment efficiency of the desalination plant is estimated to be 45- 50 percent. The finished water quality is targeted to be approximately 500 mg/L. The Inner Harbor Plant will treat all of their product water to potable standards and send it through the City of Corpus Christi distribution system. The La Quinta Channel Plant will treat the product water to potable water standards and deliver it to SPMWD. The SPMWD will deliver this water to industrial customers, but they may adjust water quality to meet the needs of different customers.

[13] City of Corpus Christi staff, February 2015.

5D.10.4.2 Available Yield- Inner Harbor

Seawater from the Gulf of Mexico is assumed to be available in an unlimited quantity within the context of a supply for the Coastal Bend Region. Also, it is assumed that the cost of Gulf water is zero prior to extraction from the source. The City of Corpus Christi and port industries are currently considering finished desalination supplies of 10 mgd (11,201 ac-ft/yr) to 30 MGD (33,604 ac-ft/yr) at the Inner Harbor facility.

5D.10.4.3 Engineering and Costing- Inner Harbor

Based on information provided by City staff and its consultant, the following costs were identified for the Inner Harbor seawater desalination project as shown in Tables 5D.10.3 and 5D.10.4:

- Total estimated construction costs for a 10 mgd Inner Harbor facility $237 million.
- Total estimated construction costs for a 30 mgd Inner Harbor facility $563 million.
- Lifecycle water production costs, at the fence, are estimate to be $9.87 per 1,000 gallons with debt service for a plant located at the 10 MGD Inner Harbor facility.
- Lifecycle water production costs, at the fence, are estimate to be $7.84 per 1,000 gallons with debt service for a plant located at the 30 MGD Inner Harbor facility.

Details regarding intake, desalination process, concentrate disposal outfall, and site-specific environmental impacts for transmission and delivery is unavailable at this time. A 3,500 ft raw water pipeline, 2,300 ft concentrate discharge pipeline, and 500 ft product water delivery line are included in the cost estimate, based on information provided by Freese and Nichols.

Energy is the largest operational cost of a desalination facility, and energy use is directly proportional to salinity of the source water. Using the Unified Costing Model tool for regional water planning according to TWDB guidelines, which includes a higher cost for operations and maintenance is expected to result in an annual cost around $36,042,000 to $85,875,000 for the 10 MGD and 30 MGD plants. This results in a unit cost of water of $3,218 to $2,555 per ac-ft after debt service for Inner Harbor sites with plant size ranging from 10-30 MGD. Private industry partnerships and funding structures may be considered to help reduce costs and minimize treatment plant operation and maintenance risks assumed by City operators, which may account for costing differences as compared to information shown in Table 5D.10.3 and Table 5D.10.4. The information was developed based on capital costs, project costs, and annual water productions costs provided by Freese and Nichols, updated using the UCM and is relevant for desalination distribution near the facility. Delivery costs to specific industries or municipal distribution system are not included.

Table 5D.10.3.
Cost Estimate Summary,
City of Corpus Christi- Inner Harbor 10 mgd Desalination Project (Sept 2018 Prices)

Item	Estimated Costs for Facilities
Transmission Pipeline (raw water piping)	$25,000,000
Storage Tanks (and Delivery)	$11,000,000
Water Treatment Plant (10 MGD)	$126,855,000
Total Cost of Facilities	**$162,855,000**
Engineering and Feasibility Studies, Legal Assistance, Financing, Bond Counsel, and Contingencies (30% for pipes & 35% for all other facilities)	$55,749,000
Land Acquisition and Surveying (12 acres)	$50,000
Interest During Construction (3% for 3 years with a 0.5% ROI)	$18,039,000
Total Cost of Project	**$236,693,000**
Annual Cost	
Debt Service (3.5 percent, 20 years)	$16,654,000
Water Treatment Plant	$19,028,000
Total Annual Cost	**$36,042,000**
Available Project Yield (acft/yr)	11,201
Annual Cost of Water ($ per acft)	$3,218
Annual Cost of Water After Debt Service ($ per acft)	$1,731
Annual Cost of Water ($ per 1,000 gallons)	$9.87
Annual Cost of Water After Debt Service ($ per 1,000 gallons)	$5.31

Note: Costs based on information provided by the City of Corpus Christi

Table 5D.10.4.
Cost Estimate Summary,
City of Corpus Christi- Inner Harbor 30 mgd Desalination Project (Sept 2018 Prices)

Item	Estimated Costs for Facilities
Transmission Pipeline (raw water piping; brine concentrate disposal x 3)	$51,000,000
Storage Tanks (and Delivery) x 3	$33,000,000
Water Treatment Plant (30 MGD)	$302,911,000
Total Cost of Facilities	**$386,911,000**
Engineering and Feasibility Studies, Legal Assistance, Financing, Bond Counsel, and Contingencies (30% for pipes & 35% for all other facilities)	$132,869,000
Land Acquisition and Surveying (26 acres)	$108,000
Interest During Construction (3% for 3 years with a 0.5% ROI)	$42,891,000
Total Cost of Project	**$562,779,000**
Annual Cost	
Debt Service (3.5 percent, 20 years)	
Operation and Maintenance	
Pipeline, Wells, and Storage Tanks (1% of Cost of Facilities)	$840,000
Water Treatment Plant	$45,437,000
Total Annual Cost	**$85,875,000**
Available Project Yield (acft/yr)	33,604
Annual Cost of Water ($ per acft)	$2,555
Annual Cost of Water After Debt Service ($ per acft)	$1,377
Annual Cost of Water ($ per 1,000 gallons)	$7.84
Annual Cost of Water After Debt Service ($ per 1,000 gallons)	$4.23

Note: Costs based on information provided by the City of Corpus Christi

5D.10.4.4 Available Yield- La Quinta

Seawater from the Gulf of Mexico is assumed to be available in an unlimited quantity within the context of a supply for the Coastal Bend Region. Also, it is assumed that the cost of Gulf water is zero prior to extraction from the source. The City of Corpus Christi and port industries are currently considering finished desalination supplies of 20 mgd (22,403 ac-ft/yr) to 40 mgd (44,806 ac-ft/yr).

5D.10.4.5 Engineering and Costing- La Quinta

Based on information provided by City staff and its consultant, the following costs were identified for the La Quinta Channel seawater desalination project as shown in Tables 5D.10.5 and 5D.10.6:

- Total estimated construction costs for a 20 mgd La Quinta facility $420 million.
- Total estimated construction costs for a 40 mgd La Quinta facility $768 million.
- Lifecycle water production costs, at the fence, are estimate to be $8.59 per 1,000 gallons with debt service at the 20 MGD La Quinta facility.
- Lifecycle water production costs, at the fence, are estimate to be $7.81 per 1,000 gallons with debt service for a plant located at the 40 MGD La Quinta facility.

Details regarding intake, desalination process, concentrate disposal outfall, and site-specific environmental impacts for transmission and delivery is unavailable at this time. A 11,800 ft raw water pipeline, 14,500 ft concentrate discharge pipeline, and 2,000 ft product water delivery line are included in the cost estimate, based on information provided by Freese and Nichols.

Energy is the largest operational cost of a desalination facility, and energy use is directly proportional to salinity of the source water. Using the Unified Costing Model tool for regional water planning according to TWDB guidelines, which includes a higher cost for operations and maintenance is expected to result in an annual cost around $62,720,000 to $114,102,000. This results in a unit cost of water of $2,800 to $2,547 per ac-ft after debt service for La Quinta sites with plant size ranging from 20-40 MGD. Private industry partnerships and funding structures may be considered to help reduce costs and minimize treatment plant operation and maintenance risks assumed by City operators, which may account for costing differences as compared to information shown in Table 5D.10.5 and Table 5D.10.6. The information presented in the tables was developed based on capital costs, project costs, and annual water productions costs provided by Freese and Nichols, updated using the UCM and is relevant for desalination distribution near the facility. Delivery costs to specific industries or municipal distribution system are not included.

Table 5D.10.5.
Cost Estimate Summary,
City of Corpus Christi- La Quinta 20 mgd Desalination Project (Sept 2018 Prices)

Item	Estimated Costs for Facilities
Transmission Pipeline	$78,000,000
Storage Tanks (Other Than at Booster Pump Stations)	$13,000,000
Water Treatment Plant (20 MGD)	$214,883,000
Total Cost of Facilities	**$305,883,000**
Engineering and Feasibility Studies, Legal Assistance, Financing, Bond Counsel, and Contingencies (30% for pipes & 35% for all other facilities)	$103,159,000
Land Acquisition and Surveying (19 acres)	$79,000
Interest During Construction (3% for 1 years with a 0.5% ROI)	$11,251,000
Total Cost of Project	**$420,372,000**
Annual Cost	
Debt Service (3.5 percent, 20 years)	$29,578,000
Operation and Maintenance	
Pipeline, Wells, and Storage Tanks (1% of Cost of Facilities)	$910,000
Water Treatment Plant	$32,232,000
Total Annual Cost	**$62,720,000**
Available Project Yield (acft/yr)	22,402
Annual Cost of Water ($ per acft),	$2,800
Annual Cost of Water After Debt Service ($ per acft),	$1,479
Annual Cost of Water ($ per 1,000 gallons),	$8.59
Annual Cost of Water After Debt Service ($ per 1,000 gallons),	$4.54

Note: Costs based on information provided by the City of Corpus Christi

Table 5D.10.6.
Cost Estimate Summary,
City of Corpus Christi- La Quinta 40 mgd Desalination Project (Sept 2018 Prices)

Item	Estimated Costs for Facilities
Transmission Pipeline (raw water piping/intake; brine concentrate disposal x 2)	$113,000,000
Storage Tanks (and Delivery) x 2	$26,000,000
Water Treatment Plant (40 MGD)	$390,940,000
Total Cost of Facilities	**$529,940,000**
Engineering and Feasibility Studies, Legal Assistance, Financing, Bond Counsel, and Contingencies (30% for pipes & 35% for all other facilities)	$179,829,000
Land Acquisition and Surveying (33 acres)	$138,000
Interest During Construction (3% for 3 years with a 0.5% ROI)	$58,568,000
Total Cost of Project	**$768,475,000**
Annual Cost	
Debt Service (3.5 percent, 20 years)	$54,071,000
Operation and Maintenance	
Pipeline, Wells, and Storage Tanks (1% of Cost of Facilities)	$1,390,000
Water Treatment Plant	$58,641,000
Total Annual Cost	**$114,102,000**
Available Project Yield (acft/yr)	44,804
Annual Cost of Water ($ per acft)	$2,547
Annual Cost of Water After Debt Service ($ per acft)	$1,340
Annual Cost of Water ($ per 1,000 gallons)	$7.81
Annual Cost of Water After Debt Service ($ per 1,000 gallons)	$4.11

Note: Costs based on information provided by the City of Corpus Christi

5D.10.4.6 Environmental Issues

The two project areas being considered by the City of Corpus Christi for the proposed desalination plant are the Inner Harbor and La Quinta sites. The La Quinta option is located on Corpus Christi Bay, east of the inlet to Nueces Bay; the Inner Ship Channel option is located along the Main Turning Basin, near the outlet to Corpus Christi Bay. The specific siting information is still to be determined, but each proposed desalination plant site would be approximately 10 acres in size. Key factors considered in the selection of these two locations are the availability of power, proximity to the water transmission system, the character of the source water, location of a suitable concentrate discharge location, among other environmental considerations.[14]

Specific siting information for the discharge of desalination concentrate will be determined during project design. Since the desalination concentrate will be saltier than the receiving waters, the City of Corpus Christi has stated that a diffusing system would be desirable to remix the concentrate with the source water. Additional food grade type chemicals, which may be used during the filtering/treating process, may be present in the concentrate. The outfall for brine concentrate will need to consider impacts to the estuary and bay system. Prior to construction, site specific environmental studies will need to be conducted to evaluate all potential impacts to the environment, and identify best management practices to eliminate or reduce adverse impacts. [15] The City plans to submit water rights and discharge permit applications to TCEQ in 2020.

Inner Harbor Desalination Site

The Texas Parks and Wildlife Department maintains the Texas Natural Diversity Database (TXNDD) which documents the occurrence of endangered, threatened and rare species, natural communities, and animal aggregations. The TXNDD data was reviewed for recorded occurrences of listed or rare species or natural communities, near the proposed project. The plains spotted skunk (*Spilogale putorius interrupta*), a rare species has been documented at the project site. The West Indian manatee (*Trichechus manatus*), a federally-listed threatened species, and a marine mammal with protections under the Marine Mammal Protection Act has been documented within two miles of the proposed project site. Three rare species, the Texas diamondback terrapin (*Malaclemys terrapin littoralis*), Texas stonecrop (*Lenophyllum texanum*), and Texas windmill grass (*Chloris texensis*) have also been documented within two miles of the proposed project. The TXNDD data identified a colonial wading bird colony (rookery) on the northeast side of the causeway (US 181) across Nueces Bay.

National Wetland Inventory (NWI) maps were reviewed and the proposed Inner Harbor Desalination site may be in close proximity to estuarine and marine deepwater habitat, freshwater ponds, and freshwater emergent wetlands. A jurisdictional determination of waters

[14] City of Corpus Christi Desalination Project Frequently Asked Questions (https://www.cctexas.com/sites/default/files/water-desal-faq-022819.pdf)
[15] City of Corpus Christi Desalination Project Frequently Asked Questions (https://www.cctexas.com/sites/default/files/water-desal-faq-022819.pdf)

should be completed for the proposed project site, during project planning. Coordination with the U.S. Army Corps of Engineers would be required for impacts to waters of the U.S.

The proposed desalination plant would be located on the Inner Harbor. The Corpus Christi Inner Harbor (TCEQ Segment 2484) is listed as impaired on TCEQ's 2020 Draft 303(d) List[16] for copper in the water. Within approximately 5 miles, several Corpus Christi Bay Recreational Beaches (TCEQ Segments 2481CB_03, _04 and _06) are listed as impaired for bacteria in water. Additionally, the inlet to Nueces Bay (Oyster Water) (TCEQ Segment 2482OW) is likely within 5 miles of the proposed desalination plant and is listed as impaired for copper in water.

Cultural resources protection on public lands in Texas is afforded by the Antiquities Code of Texas (Title 9, Chapter 191, Texas Natural Resource Code of 1977), the National Historic Preservation Act (Pl96-515), and the Archeological and Historic Preservation Act (PL93-291). Based on the review of publicly available Geographic Information System (GIS) records obtained from the Texas Historical Commission, there are no State Historic Sites, National Register Properties or Districts, cemeteries or Historical Markers within the project area. Two cemeteries, New Bayview and Old Bayview, as well as five sites listed on the National Register of Historic Places, the Nueces County Courthouse, Simon Gugenheim House, Charlotte Sidbury House, S. Julius Lichtenstein House, and the U.S.S. Lexington were located within approximately one mile from the project area. A review of archaeological resources in the proposed project area should be conducted during the project planning phase. Because the owner or controller of the proposed project, the City of Corpus Christi, is a political subdivision of the State of Texas they will be required to coordinate with the Texas Historical Commission prior to project construction.

<u>La Quinta Desalination Site</u>

The TXNDD data was reviewed for documented occurrences of listed or rare species or natural communities near the project area. The federally-listed endangered jaguarundi (*Felis yagouaroundi cacomitli*), as well as several rare species or SGCN, the keeled earless lizard (*Holbrookia propinqua*), coastal gay-feather (*Liatris bracteata*), threeflower broomweed (*Thurovia triflora*), Indianola beakrush (*Rynchospora indianolensis*), and Wright's trichocoronis (*Trichocoronis wrightii var wrightii*) have been documented within two miles of the proposed La Quinta site. Additionally, a rookery was documented on the spoil banks in Corpus Christi Bay, located southeast of the project area.

National Wetland Inventory (NWI) maps were reviewed and the proposed La Quinta Desalination site may be in close proximity to estuarine and marine deepwater habitat, estuarine and marine wetlands, freshwater ponds, and lakes. A jurisdictional determination of waters should be completed for the proposed project site, during project planning. Coordination with the U.S. Army Corps of Engineers would be required for impacts to waters of the U.S.

[16] TCEQ, 2020. Draft 2020 Texas Integrated Repot – Texas 303(d) List (Category 5). Accessed online https://www.tceq.texas.gov/assets/public/waterquality/swqm/assess/20txir/2020_303d.pdf January 13, 2020.

The proposed desalination plant would be located on the Corpus Christi Bay (TCEQ Segment 2481OW).[17] This Segment is not listed as impaired on the 2020 Draft 303(d) List. No impaired water quality segments are likely located within 5 miles of the proposed project site.

Based on the review of publicly available GIS records obtained from the Texas Historical Commission, there are no State Historic Sites, National Register Properties or Districts, cemeteries or Historical Markers within the project area, or within one mile of the proposed project area. A review of archaeological resources in the proposed project area should be conducted during the project planning phase. Because the owner or controller of the proposed project, the City of Corpus Christi, is a political subdivision of the State of Texas (i.e., river authority, municipality, county, etc.), they will be required to coordinate with the Texas Historical Commission prior to project construction.

5D.10.4.7 Implementation Issues

Permitting of this facility will require extensive coordination with all applicable regulatory entities. Permitting and construction of the intake and concentrate pipeline will be major project components.

The installation and operation of a seawater desalination water treatment plant may have to address the following issues.

- Disposal of concentrated brine from desalination water treatment plant;
- Permitting and constructing concentrate pipeline through seagrass beds and barrier island;
- Impact on the bays from removing water for consumptive use and altering existing power plant water rights permits;
- Confirming that blending desalted seawater with other water sources in the municipal demand distribution system can be successfully accomplished;
- High power requirements for desalination process dependent on large, reliable power source;
- Skilled operators of desalination water treatment plants;
- Conforming with applicable environmental laws and regulations such as the Texas Pollutant Discharge Elimination System, Endangered Species Act, Texas Antiquities Code, the Clean Water Act (Section 404 and 401), Section 10 Rivers and Harbors Act, and applicable local regulations;
- Permitting of a pipeline across rivers, highways, and private rural and urban property; and
- Possibility of using a design, build, operate contract for a desalination water treatment plant.

5D.10.4.8 Evaluation Summary

An evaluation summary of this regional water management strategy is provided in Table 5D.10.7.

[17] TCEQ, 2020. Surface Water Quality Viewer. Accessed online tceq.maps.arcgis.com January 13, 2020.

Table 5D.10.7. Evaluation Summary of the City of Corpus Christi's Inner Harbor and La Quinta Seawater Desalination Projects

Impact Category	Comment(s)
a. Water supply: 1. Quantity 2. Reliability 3. Cost of treated water	 1. Project size: Inner Harbor: 11,201 ac-ft/yr) to 33,604 ac-ft/yr and La Quinta: 22,402 ac-ft/yr) to 44,804 ac-ft/yr 2. Highly reliable quantity. 3. Cost for Inner Harbor: $2,555 to $3,218 and La Quinta $2,547 to $2,800 perac-ft.
b. Environmental factors: 1. Instream flows 2. Bay and estuary inflows and arms of the Gulf of Mexico 3. Wildlife habitat 4. Wetlands 5. Threatened and endangered species 6. Cultural resources 7. Water quality a. dissolved solids b. salinity c. bacteria d. chlorides e. bromide f. sulfate g. uranium h. arsenic i. other water quality constituents	 1. None or low impact. 2. Environmental impact to estuary. 3. Disposal of concentrated brine created from process may impact fish and wildlife habitats or wetlands. 4. Disposal of concentrated brine created from process may impact fish and wildlife habitats or wetlands. 5. None identified. Endangered species survey will be needed to identify impacts. 6. Cultural resources survey will be needed to identify any significant sites. 7. 7a-b. Total dissolved solids and salinity of water is removed with reverse osmosis treatment. Brine concentrate disposal issues will need to be evaluated. 7c-i. Bacteria, chlorides, nitrate, alkalinity, ammonia, and copper were all identified as constituents of concern for the Nueces Bay in the TCEQ and NRA Basin Highlights Report. Additional studies regarding impacts on or as a result of project are needed.
c. Impacts to agricultural resources and State water resources	• No negative impacts on other water resources • Negligible impacts to agricultural resources
d. Threats to agriculture and natural resources in region	• Temporary damage due to construction of pipeline
e. Recreational impacts	• None
f. Equitable comparison of strategies	• Standard analyses and methods used for portions • Seawater desalination cost modeled after bid and manufacturers' budgets, but not constructed, comparable project
g. Interbasin transfers	• Not applicable
h. Third party social and economic impacts	• Not applicable
i. Efficient use of existing water supplies and regional opportunities	• Provides regional opportunities
j. Effect on navigation	• None
k. Impacts to water pipelines and other facilities used for water conveyance	• Construction and maintenance of transmission pipeline corridor (in future). Possible impact to wildlife habitat along pipeline route and right-of-way.

5D.10.5 Poseidon Regional Seawater Desalination Project at Ingleside

5D.10.5.1 Description of Strategy

Desalting seawater from the Gulf of Mexico is a potential source of freshwater supplies for municipal and industrial uses. The City of Ingleside, as a project sponsor, has initiated a process with Poseidon Water to evaluate, design, build, finance, operate and maintain a large-scale seawater desalination plant in San Patricio County. The project contemplates delivery of the facility via a Public-Private-Partnership (P3), however costs shown in the 2021 Region N Plan will be based on the unified costing model tool comparable to other water management strategies, per TWDB guidelines. The project sponsor and Poseidon Water expect the actual costs of the project to be lower than those projected by the unified costing model tool. As a comparison, the project sponsor and Poseidon Water P3 project delivery indicates costs in the range of between $4.78 and $5.60 per kgal for first phase at 50 MGD and $3.41 - $4.02 for second phase (50 MGD additional treatment capacity).

The initial desalination project is for a 50 MGD desalination facility, expandable to up to 100 MGD (112,000 acre-feet-per-year) to meet future industrial demand. The general location for the siting of the plant is within the city limits of Ingleside and potential service area is shown in the map in Figure 5D.10.4. Although the project could be configured to provide water for municipal purposes, if desired by regional entities, the singular focus and evaluation is based on development, production and treatment of seawater via reverse osmosis for new manufacturing (industrial) uses in San Patricio County.

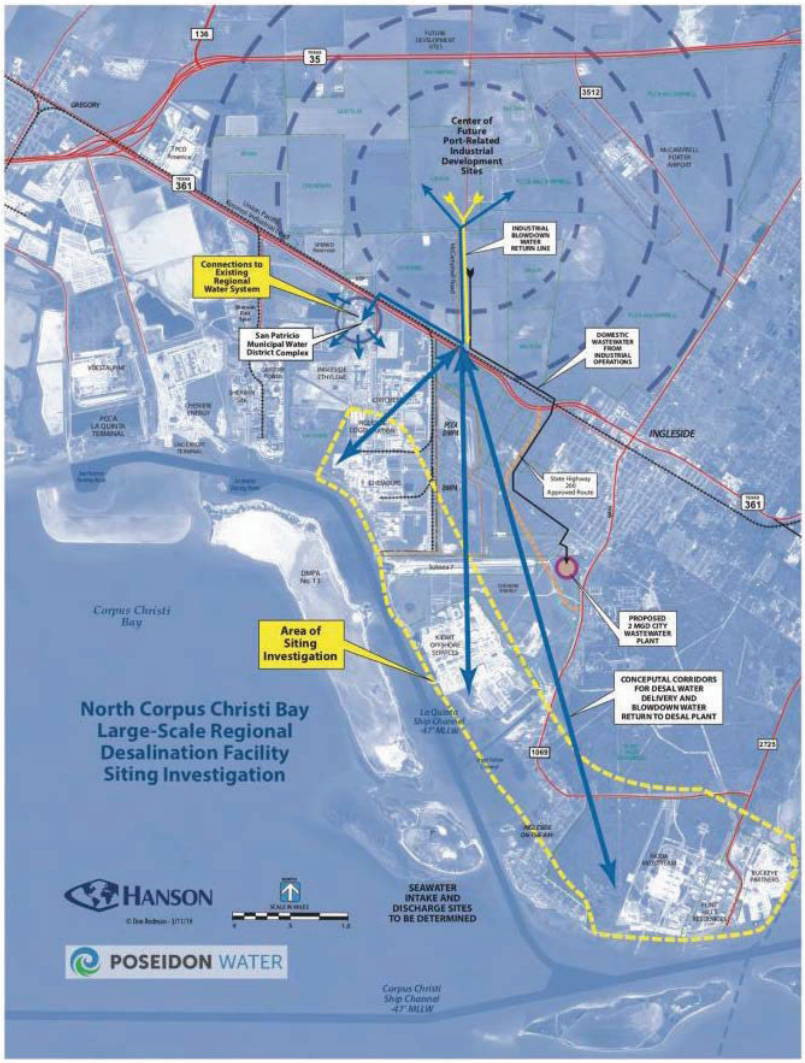

Source: Poseidon Water Map, 2019 via email September 2019

Figure 5D.10.4.
Proposed Location for Poseidon Regional Seawater Desalination Project at Ingleside

It is estimated that the first 50 MGD phase of water supply will be needed in the 2020 decade. Additional treatment trains would be constructed as demand for water and need to produce is identified and desired. The plant is expected to have a 45% recovery rate. That is, at maximum anticipated production, it would divert approximately 225 MGD of seawater to produce 100 MGD of treated desalinated water for manufacturing purposes and potentially additional water for brine dilution. The water quality data at La Quinta Channel in Corpus Christi Bay indicates the seawater (source water) salinity ranges from 14,550 mg/L to 40,500 mg/L, with an average salinity of 31,600 mg/L over a 35-year period from 1985 to 2019. Discharge of the reverse osmosis (RO) concentrate will contribute additional salt load to the La Quinta ship channel, design as to not impact intake quality. It should be noted that this strategy cost may not be comparable to other seawater desalination project strategies that have concentrate disposal in deeper water at significant distance from intake as to minimize co-mingling with concentrate.

Final intake and outfall locations will be governed by available land acquisition and hydrodynamic modeling. According to project sponsors, preliminary conversations with hydrodynamic modelers familiar with the Corpus Christi Bay system have indicated that there is expected to be adequate tidal exchange and transfer to allow several large-scale seawater desalination plants to be permitted and operate successfully without any material environmental impacts to the Corpus Christi Bay system. There is potential wastewater reuse from industrial return flows as well as municipal wastewater discharges including possible expansion of Ingleside's wastewater treatment facilities and/or to contract with Ingleside for the recapture and reuse of wastewater effluent in the desalination process and/or brine disposal treatment facilities. The final decisions regarding use of wastewater discharge require interest and cooperation amongst parties involved including review of any impacts to TCEQ Agreed Order return flow provisions. Water diversions from Corpus Christi Bay are not anticipated nor permitted to impact any other issued rights in the basin, nor impact environmental flow requirements.

5D.10.5.2 Available Yield

Seawater from the Gulf of Mexico is assumed to be available in an unlimited quantity within the context of a supply for the Coastal Bend Region. Also, it is assumed that the cost of Gulf water is zero prior to extraction from the source. The estimated supply is up to 112,000 ac-ft per year (100 MGD) based on the size of the desalination plant to meet new manufacturing demands in San Patricio County.

5D.10.5.3 Environmental Issues

The Poseidon Regional Seawater Desalination Project at Ingleside is a cooperative effort between Ingleside and Poseidon Water, which is pursuant to a Memorandum of Understanding between the groups. The proposed project is located on the northeast side of Corpus Christi Bay near Ingleside. The proposed desalination plant would utilize RO to treat seawater from the Gulf of Mexico and produce 50 MGD initially. At full capacity, the plant would be expected to divert approximately 225 MGD of seawater to produce 100 MGD. This strategy is primarily focused on treatment of seawater for new manufacturing (industrial) uses and to support future economic growth, rather than to serve the needs of existing water users. As of August 2019, two potential sites have been identified within the siting investigation area.[18]

This project is currently working to identify a site for the proposed seawater desalination plant, and has identified two sites within the project siting investigation area provided. Poseidon has indicated that construction of the plant would be expected to occur in a previously developed industrial area. Corpus Christi Bay (TCEQ Segment 2481), where the proposed desalination intake/outfall locations will be located, has no impairments listed, but Corpus Christi Bay – recreational beaches (TCEQ Segment 2481CB_03, 04, and 06) are listed on the Clean Water Act, Section 303(d) list for impairment due to bacteria.

[18] Poseidon Water, 2019. Evaluation Summary of the Coastal Bend Regional Seawater Desalination Plant Option – Final82819.docx. Dated August 2019.

The TXNDD data, maintained by the TPWD was reviewed for documented occurrences of threatened, endangered or rare species or natural communities near the proposed project area. Currently, the proposed project location covers a large geographic area. Within the project siting investigation area, the federally-endangered jaguarundi (*Felis yaguarondi*) has been documented, as well as the state threatened Texas scarlet snake (*Cemophora coccinea lineri*), and four SGCN, the keeled earless lizard (*Holbrookia propinqua*), threeflower broomweed (*Thurovia triflora*), tree dodder (*Cuscuta exaltata*), and sand Brazos mint (*Brazoria arenaria*). The coastal live oak-redbay series, a natural community of concern was identified on the southern portion of the proposed project location. The West Indian manatee (*Trichechus manatus*) was documented near Ingleside Point, the rare Indianola beakrush (*Rynchospora indianolensis*) was documented in Ingelside, and four rookeries have been documented within two miles of the proposed project area on small spoil islands just offshore in Corpus Christi Bay. Site specific surveys to determine potential impacts to threatened, endangered, or rare species and habitats should be completed as design progresses.

National Wetland Inventory (NWI) maps were reviewed and the proposed Poseidon Ingelside Desalination site may be in close proximity to estuarine and marine deepwater habitat, estuarine and marine wetlands, freshwater ponds, and numerous freshwater emergent wetlands. A jurisdictional determination of waters should be completed for the proposed project site, during project planning. Coordination with the U.S. Army Corps of Engineers would be required for impacts to waters of the U.S.

The proposed desalination plant would be located on the Corpus Christi Bay (TCEQ Segment 2481OW). This segment is not listed on TCEQ's 2020 Draft 303(d) List[19] and no impaired water quality segments are located within 5 miles.

Cultural resources protection on public lands in Texas is afforded by the Antiquities Code of Texas (Title 9, Chapter 191, Texas Natural Resource Code of 1977), the National Historic Preservation Act (Pl96-515), and the Archeological and Historic Preservation Act (PL93-291). Based on the review of publicly available Geographic Information System (GIS) records obtained from the Texas Historical Commission, there are no State Historic Sites, National Register Properties or Districts, cemeteries or Historical Markers within the project area, or within one mile of the proposed project area. Although several archeological surveys have been conducted within the project area, a review of archaeological resources in the proposed project area should be conducted during the project planning phase. If the owner or controller of the project is a political subdivision of the State of Texas (i.e., river authority, municipality, county, etc.), they will be required to coordinate with the Texas Historical Commission prior to project construction in accordance with the Texas Antiquities Code.

[19] TCEQ, 2020. Draft 2020 Texas Integrated Repot – Texas 303(d) List (Category 5). Accessed online https://www.tceq.texas.gov/assets/public/waterquality/swqm/assess/20txir/2020_303d.pdf January 13, 2020.

5D.10.5.4 Engineering and Costing

Some of the cost associated with the project are summarized below:

- Total estimated project cost for a 50 mgd facility located in Ingleside is $724,984,000.
- Total estimated project cost for a 100 mgd facility located in Ingleside is $1,280,848,000.
- Lifecycle water production costs, at the fence, are estimate to be $6.77 per 1,000 gallons at Ingleside for a 50 mgd facility.
- Lifecycle water production costs, at the fence, are estimate to be $6.00 per 1,000 gallons at Ingleside for a 100 mgd facility.

Details regarding intake, desalination process, concentrate disposal outfall, site-specific environmental impacts, and storage needs is unavailable at this time and was not included in the cost estimate. A 3.5 mile (18,480 ft) product water delivery line for delivery to the industrial complex in San Patricio County is included in the cost estimate, based on information provided by Poseidon Water.. Energy is the largest operational cost of a desalination facility, and energy use is directly proportional to salinity of the source water. Using the Unified Costing Model tool for regional water planning according to TWDB guidelines, which includes a higher cost for operations and maintenance is expected to result in an annual cost around $123,638,000 to $218,932,000. This results in a unit cost of water of $1,955 to $2,206 per ac-ft. Private industry partnerships and funding structures may be considered to help reduce costs and minimize treatment plant operation and maintenance risks assumed by City operators. The information presented in Table 5D.10.8 and Table 5D.10.9 was developed based on capital costs, project costs, and annual water productions costs with information provided by the City of Ingleside and Poseidon.

Table 5D.10.8.
Cost Estimate Summary Poseidon Regional Seawater Desalination Project at Ingleside 50 MGD Desalination Project (Sept 2018 Prices)

Item	Estimated Costs for Facilities
Primary Pump Station (50 MGD, 1,240 HP)	$6,538,000
Transmission Pipeline (60 in dia., 3.5 miles)	$10,679,000
Water Treatment Plant (50 MGD)	$478,968,000
Total Cost of Facilities	**$496,185,000**
Engineering and Feasibility Studies, Legal Assistance, Financing, Bond Counsel, and Contingencies (30% for pipes & 35% for all other facilities)	$173,131,000
Environmental & Archaeology Studies and Mitigation	$201,000
Land Acquisition and Surveying (51 acres)	$214,000
Interest During Construction (3% for 3 years with a 0.5% ROI)	$55,253,000
Total Cost of Project	**$724,984,000**
Annual Cost	
Debt Service (3.5 percent, 20 years)	$51,011,000
Operation and Maintenance	
Pipeline, Wells, and Storage Tanks (1% of Cost of Facilities)	$107,000
Intakes and Pump Stations (2.5% of Cost of Facilities)	$163,000
Water Treatment Plant	$71,845,000
Pumping Energy Costs (6395777 kW-hr @ 0.08 $/kW-hr)	$512,000
Total Annual Cost	**$123,638,000**
Available Project Yield (acft/yr)	56,044
Annual Cost of Water ($ per acft),	$2,206
Annual Cost of Water After Debt Service ($ per acft),	$1,296
Annual Cost of Water ($ per 1,000 gallons),	$6.77
Annual Cost of Water After Debt Service ($ per 1,000 gallons),	$3.98

Table 5D.10.9.
Cost Estimate Summary Poseidon Regional Seawater Desalination Project at Ingleside 100 MGD Desalination Project (Sept 2018 Prices)

Item	Estimated Costs for Facilities
Primary Pump Station (100 MGD, 2,483 HP)	$12,589,000
Transmission Pipeline (78 in dia., 3.5 miles)	$15,183,000
Water Treatment Plant (100 MGD)	$848,803,000
Total Cost of Facilities	**$876,575,000**
Engineering and Feasibility Studies, Legal Assistance, Financing, Bond Counsel, and Contingencies (30% for pipes & 35% for all other facilities)	$306,042,000
Environmental & Archaeology Studies and Mitigation	$296,000
Land Acquisition and Surveying (76 acres)	$318,000
Interest During Construction (3% for 3 years with a 0.5% ROI)	$97,617,000
Total Cost of Project	**$1,280,848,000**
Annual Cost	
Debt Service (3.5 percent, 20 years)	$90,122,000
Operation and Maintenance	
Pipeline, Wells, and Storage Tanks (1% of Cost of Facilities)	$152,000
Intakes and Pump Stations (2.5% of Cost of Facilities)	$315,000
Water Treatment Plant	$127,320,000
Pumping Energy Costs (12792919 kW-hr @ 0.08 $/kW-hr)	$1,023,000
Total Annual Cost	**$218,932,000**
Available Project Yield (acft/yr)	112,000
Annual Cost of Water ($ per acft),	$1,955
Annual Cost of Water After Debt Service ($ per acft),	$1,150
Annual Cost of Water ($ per 1,000 gallons),	$6.00
Annual Cost of Water After Debt Service ($ per 1,000 gallons),	$3.53

5D.10.5.5 Implementation Issues

Permitting of this facility will require extensive coordination with all applicable regulatory entities. The major project components and issues with implementation will be permitting and construction of pipelines. Also this strategy contemplates a P3 delivery mechanism calling for risk transference to a private party to Design-Build-Finance-Operate-and-Maintain the project. Ownership of the project may reside with the City of Ingleside, regional partners (public and private) that join the project, or Poseidon. If ownership is not with a public entity, a contract would include how transfer of ownership will be undertaken at as called for intervals in the operation of the project or contract term end.

The installation and operation of a seawater desalination water treatment plant may have to address the following issues prior to implementation:

- Disposal of concentrated brine from desalination water treatment plant;
- Permitting and construction, which may include:
    - SACE permitting (including Section 404 Clean Waters Act and Section 10 Rivers & Harbors Act)
    - Endangered Species Act compliance and TPWD coordination, if required
    - Compliance with the Antiquities Code of Texas, the National Historic Preservation Act, and the Archeological and Historic Preservation.
    - TCEQ Water Right
    - TCEQ TPDES
    - Various TCEQ construction permits
    - Associated TCEQ registrations
    - Local land use and construction permits
    - TGLO permitting requirements
- Hydrodynamic Modeling to make sure the project is feasible
- Impact on the bays from removing water for consumptive use and altering existing power plant water rights permit;
- High power requirements for desalination process dependent on large, reliable power source;
- Skilled operators of desalination water treatment plants;
- Permitting of a pipeline across rivers, highways, and private rural and urban property; and
- Possibility of using a design, build, operate contract for a desalination water treatment plant.
- The project is a P3 project with ownership of the project residing with the City of Ingleside, regional partners (public and private), or Poseidon. There may be a need for ownership transfer in the project contract and terms.

5D.10.5.6 Evaluation Summary

An evaluation summary of this regional water management strategy is provided in Table 5D.10.10.

Table 5D.10.10. Evaluation Summary of the Poseidon Regional Seawater Desalination Project at Ingleside Project

Impact Category	Comment(s)
a. Water supply:	
1. Quantity	1. Project size: 56,000-112,000 ac-ft/yr;
2. Reliability	2. Highly reliable quantity.
3. Cost of treated water	3. Unit cost between $1,955 - $2,206 ac-ft.
b. Environmental factors:	
1. Instream flows	1. None or low impact.
2. Bay and estuary inflows and arms of the Gulf of Mexico	2. Environmental impact to estuary.
3. Wildlife habitat	3. Disposal of concentrated brine created from process may impact fish and wildlife habitats or wetlands.
4. Wetlands	4. Disposal of concentrated brine created from process may impact fish and wildlife habitats or wetlands.
5. Threatened and endangered species	5. None identified. Endangered species survey will be needed to identify impacts.
6. Cultural resources	6. Cultural resources survey will be needed to identify any significant sites.
7. Water quality a. dissolved solids b. salinity c. bacteria d. chlorides e. bromide f. sulfate g. uranium h. arsenic i. other water quality constituents	7. 7a-b. Total dissolved solids and salinity of water is removed with reverse osmosis treatment. Brine concentrate disposal issues will need to be evaluated. 7c-i. Bacteria, chlorides, nitrate, alkalinity, ammonia, and copper were all identified as constituents of concern for the Corpus Christi Bay in the TCEQ and NRA Basin Highlights Report. Additional studies regarding impacts on or as a result of project are needed
c. Impacts to Agricultural Resources and State water resources	• No negative impacts on other water resources • Negligible impacts to agricultural resources
d. Threats to agriculture and natural resources in region	• Temporary damage due to construction of pipeline
e. Recreational impacts	• None
f. Equitable comparison of strategies	• Standard analyses and methods used for portions • Seawater desalination cost modeled after bid and manufacturers' budgets, but not constructed, comparable project • Project does not include off-shore brine disposal.
g. Interbasin transfers	• Not applicable
h. Third party social and economic impacts	• Not applicable
i. Efficient use of existing water supplies and regional opportunities	• Provides regional opportunities
j. Effect on navigation	• None
k. Impact of water pipelines and other facilities used for water conveyance	• Construction and maintenance of transmission pipeline corridor (in future). Possible impact to wildlife habitat along pipeline route and right-of-way.

5D.10.6 Port of Corpus Christi Authority Seawater Desalination Project- Harbor Island

5D.10.6.1 Description of Strategy

The Port of Corpus Christ (PCCA) has proposed two desalination strategies in Nueces and/or San Patricio Counties to meet manufacturing water demands beginning in the 2020 planning decade. PCCA is a political subdivision of the State of Texas and is governed by seven commissioners. It is one of the largest energy hubs with a gateway to global markets and has recently rebranded itself as The Energy Port of the Americas. Recent years have seen a lot of economic and development growth especially due to the deepening and widening project of the ship channel around the Port, primarily related to the oil and gas industry. The list of new port projects has grown in recent years due to the deepening and widening project of the ship channel. The port is a multi-billion dollar enterprise affecting the entire state. Although it has the authority to tax, none of its revenue is generated through taxes. All of its revenues are generated through tonnage fees and rent. In 2017, PCCA directed staff to evaluate two sites for future desalination plants on PCCA's property. The proposed sites are on Harbor Island and at the north end of La Quinta Channel. PCCA is in the process of seeking discharge permits from TCEQ and water rights applications have been submitted. They intend to compliment the City's efforts to implement desalination in the region. This project would be in addition to all of the other desalination projects to secure a drought-proof source of water.

The Harbor Island project site is located on the Corpus Christi Ship Channel near Port Aransas as shown in Figure 5D.10.5. It will produce 50 MGD for both municipal and industrial use, utilize RO to treat seawater from the Gulf of Mexico, and a proposed diffuser would discharge into the Corpus Christi Ship Channel. The water rights permit has not yet been submitted for the Harbor Island project because a review of available data is underway to determine intake placement in the Gulf of Mexico. The TCEQ discharge permit was filed last year; the discharge permit has been ruled administratively complete, and the public comment /meeting process has been completed; there was a public meeting in Port Aransas in April 2019; TCEQ Executive Director recommended that the TCEQ Commissioners grant the discharge permit; the City of Port Aransas, PAC, and others petitioned for a contested case hearing; TCEQ Commissioners directed the permit to the State Office of Administrative Hearings (SOAH) for a contested case hearing; a preliminary hearing should be held in early 2020; and SOAH will then have 180 days to make a recommendation back to TCEQ. Further details about the cost of this project are below.

Source: PCCA/Naismith/Hanson, 2019 via email December 2019

Figure 5D.10.5.
Proposed Location for PCCA Seawater Desalination Project at Harbor Island

5D.10.6.2 Available Yield- PCCA Harbor Island

Seawater from the Gulf of Mexico is assumed to be available in an unlimited quantity within the context of a supply for the Coastal Bend Region. Also, it is assumed that the cost of Gulf water is zero prior to extraction from the source. The estimated supply is up to 56,044 ac-ft per year (50 MGD) based on the size of the desalination plant to meet end user customer needs.

5D.10.6.3 Environmental Issues- PCCA Harbor Island

The Harbor Island project site is located on the Corpus Christi Ship Channel across from Port Aransas. Construction of the facility would impact approximately 33 acres in a former fuel tank storage area, which is currently vacant. The proposed desalination plant would utilize RO to treat seawater from the Gulf of Mexico and produce 50 MGD for both municipal and industrial use. The Port submitted a discharge permit for the project in 2018; this permit has not been granted and a decision is expected in 2020. The Port is currently studying proposed intake locations prior to submitting an application for water rights. This project has garnered public opposition from environmental groups due to potential impacts to estuaries, wildlife, seagrass, and salinity levels. The Port proposed to discharge water via an HDPE pipeline to a multi-port diffuser approximately 300 feet offshore on the south side of Harbor Island in Corpus Christi Channel (TCEQ Segment 2481). From there, the discharge would flow either into the Gulf of

Mexico via Aransas Pass or through the Corpus Christi Channel toward Corpus Christi Bay. Water would be sampled (to determine characteristics of the effluent discharge) on land following comingling of all wastewaters prior to discharge.[20] Modeling completed by the Port and their contractors, indicates that effluent released from this plant would increase the ambient concentration less than 1% beyond the aquatic life mixing zone. They conclude that this increase would be insignificant compared to the natural variation in salinity observed in Corpus Christi Bay and would not cause degradation of local water quality.[21]

TPWD maintains the Texas Natural Diversity Database (TXNDD) which documents the occurrence of endangered, threatened and rare species, natural communities, and animal aggregations. The TXNDD data was reviewed for recorded occurrences of listed or rare species or natural communities, near the proposed project. The Tharp's dropseed (*Sporobolus tharpii*), a rare species has been documented at the project site. The West Indian manatee (*Trichechus manatus*), a federally-listed threatened species, and a marine mammal with protections under the Marine Mammal Protection Act, the green sea turtle (*Chelonia mydas*), a federal and state listed threatened species, the Atlantic hawksbill sea turtle (*Eretmochelys imbricata*) a federal and state listed endangered species, the Texas horned lizard (*Phrynosoma cornutum*) a state threatened species, the Piping Plover (*Charadrius melodus*) a federal and state listed threatened species, and velvet spurge (*Euphorbia innocua*) a rare species have been documented within two miles of the proposed project. The TXNDD data also identified rookeries on near the project area on Harbor Island and Mustang Island.

National Wetland Inventory (NWI) maps were reviewed and the proposed Harbor Island Desalination site may be in close proximity to estuarine and marine deepwater habitat and freshwater emergent wetlands. A jurisdictional determination of waters should be completed for the proposed project site, during project planning. Coordination with the U.S. Army Corps of Engineers would be required for impacts to waters of the U.S.

The proposed desalination plant would be located on Harbor Island, which is within Redfish Bay (Oyster Waters) (TCEQ Segment 2483OW). Redfish Bay is not listed as impaired on the TCEQ 2020 Draft 303(d) List[22]. The Gulf of Mexico (TCEQ Segment 2501) is located within 5 miles of the proposed Harbor Island desalination site. Segment 2501 is listed on the 2020 Draft 303(d) List as impaired for mercury in edible tissue.

Cultural resources protection on public lands in Texas is afforded by the Antiquities Code of Texas (Title 9, Chapter 191, Texas Natural Resource Code of 1977), the National Historic Preservation Act (Pl96-515), and the Archeological and Historic Preservation Act (PL93-291). Based on the review of publicly available GIS records obtained from the Texas Historical

[20] PoCCA, 2018. Texas Commission on Environmental Quality TCEQ Industrial Wastewater Permit Application – Port of Corpus Christi Authority of Nueces County Proposed Desalination Plant – Harbor Island. Dated March 5, 2018.
[21] Amec Foster Wheeler, 2017. Process Design Basis and Narrative Port of Corpus Christi Industrial Seawater Desalination Harbor Island. December 2017.
[22] TCEQ, 2020. Draft 2020 Texas Integrated Repot – Texas 303(d) List (Category 5). Accessed online https://www.tceq.texas.gov/assets/public/waterquality/swqm/assess/20txir/2020_303d.pdf January 13, 2020.

Commission, there is potentially one National Register Property and one cemetery within one mile of the proposed project area. The Tarpon Inn and Mercer Cemetery are located approximately one mile from the proposed project area in Port Aransas. No State Historic Sites, National Register Districts, or Historical Markers were identified within the project area, or within one mile of the proposed project area.

Archeological surveys have been conducted near the project area, a review of archaeological resources in the proposed project area should be conducted during the project planning phase. Because the owner or controller of the project will likely be a political subdivision of the State of Texas (i.e., river authority, municipality, county, etc.), they will be required to coordinate with the Texas Historical Commission, under the Texas Antiquities Code, prior to project construction.

5D.10.6.4 Engineering and Costing- PCCA Harbor Island

Some of the cost associated with the project are summarized below:

- Total estimated costs for a 50 mgd facility located in Harbor Island at $802,807,000.
- Assumed a 22 mile pipe to San Patricio County area and a two mile 42” pipe to Nueces County area (not shown in Figure 5D.10.5)
- Assumed 3 pipe segments: 42 inch diameter 21 miles, 36 inch diameter 1.2 miles, and 24 inch diameter 2.3 miles

Details regarding concentrate disposal outfall, site-specific environmental impacts, and storage needs is unavailable at this time and are not included in the cost estimate.

Energy is the largest operational cost of a desalination facility, and energy use is directly proportional to salinity of the source water. Using the Unified Costing Model tool for regional water planning according to TWDB guidelines, which includes a higher cost for operations and maintenance is expected to result in an annual cost around $130,167,000. This results in a unit cost of water of $2,323 per ac-ft with debt service. The information presented in Table 5D.10.11 was developed based on capital costs, project costs, and annual water productions costs with information provided by PCCAPCCA.

Table 5D.10.11.
Cost Estimate Summary of the Port of Corpus Christi Authority's 50 MGD Desalination Project at Harbor Island (Sept 2018 Prices)

Item	Estimated Costs for Facilities
Primary Pump Station (26.3 MGD)	$12,940,000
Transmission Pipeline (42 in dia., miles)	$56,451,000
Water Treatment Plant (50 MGD)	$478,968,000
Total Cost of Facilities	**$548,359,000**
Engineering and Feasibility Studies, Legal Assistance, Financing, Bond Counsel, and Contingencies (30% for pipes & 35% for all other facilities)	$189,103,000
Environmental & Archaeology Studies and Mitigation	$1,163,000
Land Acquisition and Surveying (182 acres)	$2,998,000
Interest During Construction (3% for 3 years with a 0.5% ROI)	$61,184,000
Total Cost of Project	**$802,807,000**
Annual Cost	
Debt Service (3.5 percent, 20 years)	$56,486,000
Operation and Maintenance	
Pipeline, Wells, and Storage Tanks (1% of Cost of Facilities)	$565,000
Intakes and Pump Stations (2.5% of Cost of Facilities)	$324,000
Water Treatment Plant	$71,845,000
Pumping Energy Costs (11835834 kW-hr @ 0.08 $/kW-hr)	$947,000
Total Annual Cost	**$130,167,000**
Available Project Yield (acft/yr)	56,044
Annual Cost of Water ($ per acft),	$2,323
Annual Cost of Water After Debt Service ($ per acft),	$1,315
Annual Cost of Water ($ per 1,000 gallons),	$7.13
Annual Cost of Water After Debt Service ($ per 1,000 gallons),	$4.03

5D.10.6.5 Implementation Issues- PCCA Harbor Island

Permitting of this facility will require extensive coordination with all applicable regulatory entities. The major project components and issues with implementation will be permitting and construction of pipelines.

The installation and operation of a seawater desalination water treatment plant may have to address the following issues to implementation:

- Disposal of concentrated brine from desalination water treatment plant;
- Permitting and construction, which may include:
    - SACE permitting (including Section 404 Clean Waters Act and Section 10 Rivers & Harbors Act)
    - Endangered Species Act compliance and TPWD coordination, if required
    - Compliance with the Antiquities Code of Texas, the National Historic Preservation Act, and the Archeological and Historic Preservation.
    - TCEQ Water Right
    - TCEQ TPDES
    - Various TCEQ construction permits
    - Associated TCEQ registrations
    - Local land use and construction permits
    - TGLO permitting requirements
- Hydrodynamic Modeling to make sure the project is feasible
- Impact on the bays from removing water for consumptive use and altering existing power plant water rights permit;
- High power requirements for desalination process dependent on large, reliable power source;
- Skilled operators of desalination water treatment plants;
- Permitting of a pipeline across rivers, highways, and private rural and urban property; and
- Possibility of using a design, build, operate contract for a desalination water treatment plant.
- The project is a P3 project with ownership of the project residing with the City of Ingleside, regional partners (public and private), or Poseidon. There may be a need for ownership transfer in the project contract and terms.

5D.10.6.6 Evaluation Summary

An evaluation summary of this regional water management strategy is provided in Table 5D.10.12.

Table 5D.10.12. Evaluation Summary of the Port of Corpus Christi Authority- Harbor Island 50 MGD Seawater Desalination Option(s)

Impact Category	Comment(s)
a. Water supply:	
1. Quantity	1. Project size: 56,044 ac-ft/yr
2. Reliability	2. Highly reliable quantity.
3. Cost of treated water	3. Unit Cost $2,323 /ac-ft.
b. Environmental factors:	
1. Instream flows	1. None or low impact.
2. Bay and estuary inflows and arms of the Gulf of Mexico	2. Environmental impact to estuary.
3. Wildlife habitat	3. Disposal of concentrated brine created from process may impact fish and wildlife habitats or wetlands.
4. Wetlands	4. Disposal of concentrated brine created from process may impact fish and wildlife habitats or wetlands.
5. Threatened and endangered species	5. Rare, federally-listed and/or state listed threatened species within 2 miles of proposed project site. Endangered species survey will be needed to identify impacts.
6. Cultural resources	6. Cultural resources survey will be needed to identify any significant sites.
7. Water quality a. dissolved solids b. salinity c. bacteria d. chlorides e. bromide f. sulfate g. uranium h. arsenic i. other water quality constituents	7. 7a-b. Total dissolved solids and salinity of water is removed with reverse osmosis treatment. Brine concentrate disposal issues will need to be evaluated. 7c-i. Bacteria, chlorides, nitrate, alkalinity, ammonia, and copper were all identified as constituents of concern for the Nueces Bay in the TCEQ and NRA Basin Highlights Report. Additional studies regarding impacts on or as a result of project are needed
c. Impacts to Agricultural Resources and State water resources	• No negative impacts on other water resources • Negligible impacts to agricultural resources
d. Threats to agriculture and natural resources in region	• Temporary damage due to construction of pipeline
e. Recreational impacts	• None
f. Equitable comparison of strategies	• Standard analyses and methods used for portions • Seawater desalination cost modeled after bid and manufacturers' budgets, but not constructed, comparable project
g. Interbasin transfers	• Not applicable
h. Third party social and economic impacts	• Not applicable
i. Efficient use of existing water supplies and regional opportunities	• Provides regional opportunities
j. Effect on navigation	• None
k. Impacts of water pipelines and other facilities used for water conveyance	• Construction and maintenance of transmission pipeline corridor (in future). Possible impact to wildlife habitat along pipeline route and right-of-way.

5D.10.7 Port of Corpus Christi Authority Seawater Desalination Project- La Quinta Channel

5D.10.7.1 Description of Strategy

The Port of Corpus Christ (PCCA) has proposed two desalination strategies in Nueces and/or San Patricio Counties to meet manufacturing water demands beginning in the 2020 planning decade. PCCA is a political subdivision of the State of Texas and is governed by seven commissioners. It is one of the largest energy hubs with a gateway to global markets and has recently rebranded itself as The Energy Port of the Americas. Recent years have seen a lot of economic and development growth especially due to the deepening and widening project of the ship channel around the Port, primarily related to the oil and gas industry. The list of new port projects has grown in recent years due to the deepening and widening project of the ship channel. The port is a multi-billion dollar enterprise affecting the entire state. Although it has the authority to tax, none of its revenue is generated through taxes. All is its revenues are generated through tonnage fees and rent. In 2017, PCCA directed staff to evaluate two sites for future desalination plants on PCCA's property. The proposed sites are on Harbor Island and at the north end of La Quinta Channel. PCCA is in the process of seeking discharge permits from TCEQ and water rights applications have been submitted. They intend to compliment the City's efforts to implement desalination in the region. This project would be in addition to all of the other desalination projects to secure a drought-proof source of water.

The La Quinta site is located near the La Quinta Ship Channel in San Patricio County. It will produce 30 MGD for primarily industrial use, utilize RO to treat seawater from Corpus Christi Bay, and a proposed diffuser would discharge into the La Quinta Ship Channel. Approximately 27 miles of pipeline will be used to deliver water to customers in the area. The TCEQ permit for the La Quinta Channel project were filed on September 3, 2019; TCEQ is reviewing additional information to make completeness determination; and public comment is expected in December 2019. Figure 5D.10.6 shows the proposed pipeline route for this project.

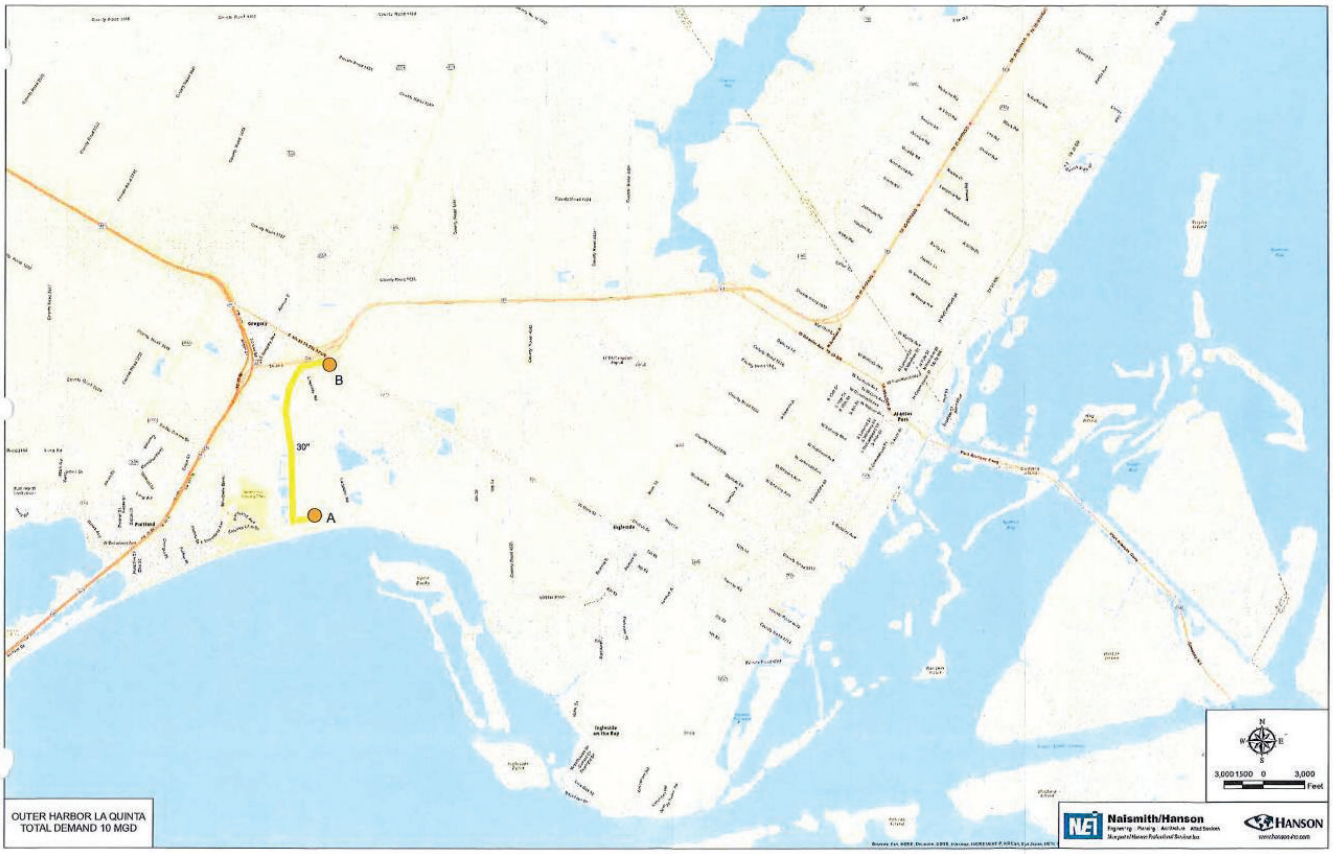

Source: PCCA/Naismith/Hanson, 2019 via email December 2019

Figure 5D.10.6.
Proposed Location for Seawater Desalination Program at La Quinta

5D.10.7.2 Available Yield- PCCA La Quinta Channel

Seawater from the Gulf of Mexico is assumed to be available in an unlimited quantity within the context of a supply for the Coastal Bend Region. Also, it is assumed that the cost of Gulf water is zero prior to extraction from the source. The estimated supply is up to 33,627 ac-ft per year (30 MGD).

5D.10.7.3 Environmental Issues- PCCA La Quinta Channel

As of September 2019, the Port has filed applications with the TCEQ for water rights and discharge permits for the proposed desalination plant. This site, located near the La Quinta Ship Channel in San Patricio County, would utilize RO to treat seawater and produce approximately 30 MGD of treated water primarily for industrial usage. This facility has a design intake flow of 90.4 MGD from Corpus Christi Bay.[23] It is expected this project would discharge through a diffuser into the La Quinta Ship Channel.

[23] PoCCA, 2019. TCEQ Water Rights Permitting Application Port of Corpus Christi Authority of Nueces County. Proposed Desalination Plant, La Quinta. Dated August 29, 2019.

The TXNDD data was reviewed for documented occurrences of listed or rare species, or natural communities near the project area. There were no documented occurrences of listed or rare species or communities within two miles of the proposed project area.

National Wetland Inventory (NWI) maps were reviewed and the proposed Port of Corpus Christi La Quinta Desalination site may be in close proximity to estuarine and marine deepwater habitat and freshwater emergent wetlands. A jurisdictional determination of waters should be completed for the proposed project site, during project planning. Coordination with the U.S. Army Corps of Enineers would be required for impacts to waters of the U.S.

The proposed desalination plant would be located on the Inner Harbor. The Corpus Christi Inner Harbor (TCEQ Segment 2484) is listed as impaired on TCEQ's 2020 Draft 303(d) List[24] for copper in the water. Within approximately 5 miles, several Corpus Christi Bay Recreational Beaches (TCEQ Segments 2481CB_03, _04 and _06) are listed as impaired for bacteria in water. Additionally, the inlet to Nueces Bay (Oyster Water) (TCEQ Segment 2482OW) is likely within 5 miles of the proposed desalination plant and is listed as impaired for copper in water.

The proposed desalination plant would be located on the La Quinta Channel. The site would discharge into Corpus Christi Bay (TCEQ Segment 2481OW), which is not listed as impaired on TCEQ's 2020 Draft 303(d) List.[25] Within approximately 5 miles, several Corpus Christi Bay Recreational Beaches (TCEQ Segments 2481CB_03, _04 and _06) are listed as impaired for bacteria in water. Additionally, the inlet to Nueces Bay (Oyster Water) (TCEQ Segment 2482OW) and the inlet to Corpus Christi Bay Inner Harbor (TCEQ Segment 2484) are within 5 miles of the proposed desalination plant and are listed as impaired for copper in water.

Cultural resources protection on public lands in Texas is afforded by the Antiquities Code of Texas (Title 9, Chapter 191, Texas Natural Resource Code of 1977), the National Historic Preservation Act (Pl96-515), and the Archeological and Historic Preservation Act (PL93-291). Based on the review of publicly available Geographic Information System (GIS) records obtained from the Texas Historical Commission, there are no State Historic Sites, National Register Properties or Districts, cemeteries or Historical Markers within the project area, or within one mile of the proposed project area.

Several archeological surveys have been conducted within the project vicinity, a review of archaeological resources should be conducted during the project planning phase. Because the owner or controller of the project will likely be a political subdivision of the State of Texas (i.e., river authority, municipality, county, etc.), they will be required to coordinate with the Texas Historical Commission, under the Texas Antiquities Code, prior to project construction.

---

[24] TCEQ, 2020. Draft 2020 Texas Integrated Repot – Texas 303(d) List (Category 5). Accessed online https://www.tceq.texas.gov/assets/public/waterquality/swqm/assess/20txir/2020_303d.pdf January 13, 2020.
[25] TCEQ, 2020. Draft 2020 Texas Integrated Repot – Texas 303(d) List (Category 5). Accessed online https://www.tceq.texas.gov/assets/public/waterquality/swqm/assess/20txir/2020_303d.pdf January 13, 2020.

5D.10.7.4 Engineering and Costing- PCCA La Quinta Channel

Some of the cost associated with the project are summarized below:

- Total estimated costs for a 30 mgd facility located in La Quinta at $457,732,000.
- Assumed a three mile 48” pipeline for delivery to industrial complex in San Patricio County.

Details regarding intake, desalination process, concentrate disposal outfall, site-specific environmental impacts, and storage needs is unavailable at this time and are not included in the cost estimate other than the three mile product delivery pipeline mentioned above.

Energy is the largest operational cost of a desalination facility, and energy use is directly proportional to salinity of the source water. Using the Unified Costing Model tool for regional water planning according to TWDB guidelines, which includes a higher cost for operations and maintenance is expected to result in an annual cost around $77,991,000. This results in a unit cost of water of $2,321 per ac-ft with debt service. The information presented in Table 5D.10.13 was developed based on capital costs, project costs, and annual water productions costs with information provided by PCCA.

Table 5D.10.13.
Cost Estimate Summary 30 MGD Desalination Project at La Quinta (Sept 2018 Prices)

Item	Estimated Costs for Facilities
Primary Pump Station (0 MGD)	$2,754,000
Transmission Pipeline (0 in dia., miles)	$7,078,000
Water Treatment Plant (30 MGD)	$302,911,000
Total Cost of Facilities	**$312,743,000**
Engineering and Feasibility Studies, Legal Assistance, Financing, Bond Counsel, and Contingencies (30% for pipes & 35% for all other facilities)	$109,106,000
Environmental & Archaeology Studies and Mitigation	$375,000
Land Acquisition and Surveying (38 acres)	$623,000
Interest During Construction (3% for 3 years with a 0.5% ROI)	$34,885,000
Total Cost of Project	**$457,732,000**
Annual Cost	
Debt Service (3.5 percent, 20 years)	$32,207,000
Operation and Maintenance	
Pipeline, Wells, and Storage Tanks (1% of Cost of Facilities)	$71,000
Intakes and Pump Stations (2.5% of Cost of Facilities)	$69,000
Water Treatment Plant	$45,437,000
Pumping Energy Costs (2593527 kW-hr @ 0.08 $/kW-hr)	$207,000
Total Annual Cost	**$77,991,000**
Available Project Yield (acft/yr)	33,604
Annual Cost of Water ($ per acft),	$2,321
Annual Cost of Water After Debt Service ($ per acft),	$1,362
Annual Cost of Water ($ per 1,000 gallons),	$7.12
Annual Cost of Water After Debt Service ($ per 1,000 gallons),	$4.18

5D.10.7.5 Implementation Issues- PCCA La Quinta Channel

Permitting of this facility will require extensive coordination with all applicable regulatory entities. The major project components and issues with implementation will be permitting and construction of pipelines.

The installation and operation of a seawater desalination water treatment plant may have to address the following issues to implementation:

- Disposal of concentrated brine from desalination water treatment plant;
- Permitting and construction, which may include:
    - SACE permitting (including Section 404 Clean Waters Act and Section 10 Rivers & Harbors Act)
    - Endangered Species Act compliance and TPWD coordination, if required
    - Compliance with the Antiquities Code of Texas, the National Historic Preservation Act, and the Archeological and Historic Preservation.
    - TCEQ Water Right
    - TCEQ TPDES
    - Various TCEQ construction permits
    - Associated TCEQ registrations
    - Local land use and construction permits
    - TGLO permitting requirements
- Hydrodynamic Modeling to make sure the project is feasible
- Impact on the bays from removing water for consumptive use and altering existing power plant water rights permit;
- High power requirements for desalination process dependent on large, reliable power source;
- Skilled operators of desalination water treatment plants;
- Permitting of a pipeline across rivers, highways, and private rural and urban property; and
- Possibility of using a design, build, operate contract for a desalination water treatment plant.
- The project is a P3 project with ownership of the project residing with the City of Ingleside, regional partners (public and private), or Poseidon. There may be a need for ownership transfer in the project contract and terms.

5D.10.7.6 Evaluation Summary

An evaluation summary of this regional water management strategy is provided in Table 5D.10.14.

Table 5D.10.14. Evaluation Summary of the the Port of Corpus Christi Authority- La Quinta Channel 30 MGD Project

Impact Category	Comment(s)
a. Water supply:	
1. Quantity	1. Project size: 33,604 ac-ft/yr
2. Reliability	2. Highly reliable quantity.
3. Cost of treated water	3. Cost $2,321 per ac-ft.
b. Environmental factors:	
1. Instream flows	1. None or low impact.
2. Bay and estuary inflows and arms of the Gulf of Mexico	2. Environmental impact to estuary.
3. Wildlife habitat	3. Disposal of concentrated brine created from process may impact fish and wildlife habitats or wetlands.
4. Wetlands	4. Disposal of concentrated brine created from process may impact fish and wildlife habitats or wetlands.
5. Threatened and endangered species	5. None identified. Endangered species survey will be needed to identify impacts.
6. Cultural resources	6. Cultural resources survey will be needed to identify any significant sites.
7. Water quality a. dissolved solids b. salinity c. bacteria d. chlorides e. bromide f. sulfate g. uranium h. arsenic i. other water quality constituents	7. 7a-b. Total dissolved solids and salinity of water is removed with reverse osmosis treatment. Brine concentrate disposal issues will need to be evaluated. 7c-i. Bacteria, chlorides, nitrate, alkalinity, ammonia, and copper were all identified as constituents of concern for the Nueces Bay in the TCEQ and NRA Basin Highlights Report. Additional studies regarding impacts on or as a result of project are needed
c. Impacts to Agricultural Resources and State water resources	• No negative impacts on other water resources • Negligible impacts to agricultural resources
d. Threats to agriculture and natural resources in region	• Temporary damage due to construction of pipeline
e. Recreational impacts	• None
f. Equitable comparison of strategies	• Standard analyses and methods used for portions • Seawater desalination cost modeled after bid and manufacturers' budgets, but not constructed, comparable project
g. Interbasin transfers	• Not applicable
h. Third party social and economic impacts from voluntary redistribution of water	• Not applicable
i. Efficient use of existing water supplies and regional opportunities	• Provides regional opportunities
j. Effect on navigation	• None
k. Impacts to water pipelines and other facilities used for water conveyance	• Construction and maintenance of transmission pipeline corridor (in future). Possible impact to wildlife habitat along pipeline route and right-of-way.